CATALOGUE 021/22

Porta

DRILL CHUCKS & POWER TOOL ACCESSORIES

SINCE 1936

CATALOGUE UPDATED 2021/22

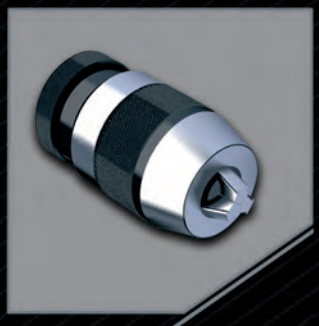

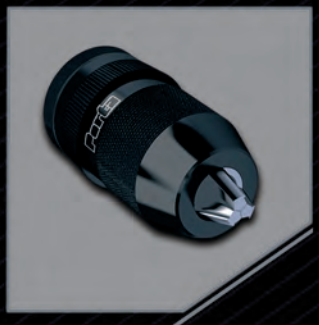

Porta worldwide

Porta s.r.l.
Via Sommariva, 33/12
10022 Carmagnola - Torino
Telefono: +39 011 97 10 018
Fax: +39 011 97 12 547
E-mail: porta@portachucks.com
www.portachucks.com

Porta (U.K.) Ltd
Dukeries Way
Dukeries Industrial Estate
Worksop, Notts S81 7DW - England
Telefono: ++44 - (0) 1909 - 530135
Fax: ++44 - (0) 1909 - 501589
E-mail: sales@portauk.co.uk
www.portaplus.co.uk

AUSTRALIA	M GAMER PTY. LTD 36 Success St. – ACACIA RIDGE Q 4110 BRISBANE Telephone +61-7-32776611 – Fax +61-7-38751531 E-mail : sales@gamer.com.au www.gamer.com.au
CANADA	MASCOUTECH INC. 998 rue Jean- Neveu - LONGUEUIL – QUÉBEC J4G 2M1 Telephone +1-450-442 4232 - Fax +1-450-442 9212 E-mail: sales@mascoutech.com www.mascoutech.com
FINLAND	KOIVUNEN OY P.O. BOX 115 - FI-00701 HELSINKI - FINLAND Telephone +358-10-65011– Fax +358-10-6501324 E-mail: konesasto@koivunen.fi www.koivunen.fi
FRANCE	CORI Zone Industrielle Les Portes du Nord - Chemin des Blatiers Chemin des Blatiers - 62820 LIBERCOURT (FRANCE) Telephone +33-321-797474 – Fax +33-321-797479 E-mail: cori@cori-electroportatif.fr
GERMANY	ALWEMA GmbH Grünestr. 49a - 42929 Wermelskirchen Telephone +49(0)2196-8897037 – Fax +49(0)2196-8897039 E-mail: service@alwema.com
NEW ZEALAND	TOOLWARE SALES LIMITED PO BOX 204233 - HIGHBROOK - AUCKLAND 2161 - NZ Telephone +64-9-5798080 – Fax +64-9-5262526 E-mail: info@toolware.co.nz www.toolware.co.nz
SOUTH AFRICA	BEARING MAN GROUP (PTY) Ltd 3 DROSTE CRESCENT DROSTE PARK JEPPESTOWN JOHANNESBURG 2001 SOUTH AFRICA
SPAIN	ASEIN COMERCIALIZACION 1983, S.L. Enric Prat de La Riba, 10 08830 SANT BOI DE LLOBREGAT – BARCELONA Telephone:+34-93-4850143 – Fax +34-93-3091584 E-mail: asein@asein.com www.asein.com
TURKEY	ENTEGRAL ENDUSTRIYEL URUNLER SAN.VE TIC.LTD.STI. Entegral Endustriyel Urunler San.ve Tic.Ltd.Sti. Dr. Mithat Suer Sok., Ak Apt. No: 1/13 Erenkoy - Kadikoy-İstanbul Telephone: + 90 216 545 18 26 or 27 - Fax: + 90 216 545 17 14 E-mail: burcu.tepe@entegralgroup.com www.entegralgroup.com

Indice

KEYLESS DRILL CHUCKS	
Industrial line for power tools and stationary equipment	2
Industrial line for percussion power tools	3
High accuracy industrial line for machine tools and production drilling machines	3
Precision grade for CNC machine tools and machining centres standard jaws	4
Extra-torque precision grade for CNC machine tools and machining centres titanium jaws	4
Precision grade with integral shank	5
Precision grade spare chucks	5
Precision grade with integral shank for CNC machine tools and machining centres	6-7
Spare parts for SUPER VALIDUS, PP and PPT	8
REVERSING KEYLESS CHUCKS	
TAURUS range and Impact Chucks	8-9-10-11-12
KEY OPERATED DRILL CHUCKS	
Medium and heavy duty line for production drilling machines, industrial and professional power tools	13
Standard duty line for portable power tools	14
Standard duty line for screwdrivers with hexagonal male mount	14
Standard duty key operated chuck nickel plated	15
Stainless steel key operated chuck for use specifically in medical, chemical and food sector	15
Ball-bearing drill chuck with key for production drilling equipment	15
Hammer key type drill chucks with SDS adaptor	15
Hammer key type drill chucks with SDS adaptor	15
Chuck keys	16
MACHINE TOOLS ACCESSORIES	
Ejecting drifts	17
Right angle drill attachment	18-19
Professional right angle drill attachment	20
360° right angle drill attachment	21
Quick change SDS converter	22
Drilling and screwing bits quick change holder set	22
Rivet converter	23
Chuck extender for portable drill	23
Flexible bit holder for screwdriver	24
Flexible shaft with spring chuck	24
Quick clamping nut	24
Chuck adaptors	25-26
Morse taper arbors	27
Iso taper stub arbors	28
Parallel arbors with Jacobs taper mounts	28
Bridgeport R8 taper adaptors for chucks with DIN or Jacobs mount	29
Bridgeport R8 taper adaptors with Morse taper bore	29
Reducing sleeves DIN 2185	30
Reducing sleeves with plain through hole	30
Morse taper turret sockets	31
Iso taper to Morse taper adaptors	31
Extension sockets DIN 2187	32
Long pattern extension sockets	33
Lathe (dead) centres	34
Lathe centres with draw off nut according to DIN80735	35
Revolving centres	36-37
Technical information	38

Validus keyless chucks, **industrial line, self-tightening style** for power tools, pedestal and bench drilling machines **rotary right hand rotation only**

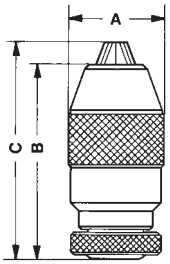

Model No.	Drilling capacity mm	Mount	A mm	B mm	C mm	Packaging style	Weight g
32B10	0-6	DIN B10	34,5	65	72	Individual box	365
32B12		DIN B12					
32J1		JACOBS 1					
32F38		Female thr. 3/8” x 24					
32F12		Female thr. 1/2” x 20					
34B10	0-8	DIN B10	34,5	65	72	Individual box	365
34B12		DIN B12					
34J2		JACOBS 2					
34J1		JACOBS 1					
34F38		Female thr. 3/8” x 24					
34F12		Female thr. 1/2” x 20					
35B12	1-10	DIN B12	34,5	72	79	Individual box	365
35J2		JACOBS 2				Individual box	
35F38		Female thr. 3/8” x 24				Individual box	
35F38B		Female thr. 3/8” x 24				Blister card	
35F12		Female thr. 1/2” x 20				Individual box	
35F12B		Female thr. 1/2” x 20				Blister card	
36B16	0-10	DIN B16	44	83	93	Individual box	650
36J2		JACOBS 2					
36J33		JACOBS 33					
375B16	1.5-13	DIN B16	40,5	85	93	Individual box	540
375F38		Female thr. 3/8” x 24				Individual box	
375F38B		Female thr. 3/8” x 24				Blister card	
375F12		Female thr. 1/2” x 20				Individual box	
375F12B		Female thr. 1/2” x 20				Blister card	
37B12	1-13	DIN B12	42,5	90	101	Individual box	660
37B16		DIN B16					
37J6		JACOBS 6					
37J2		JACOBS 2					
37J33		JACOBS 33					
37F38		Female thr. 3/8” x 24					
37F12		Female thr. 1/2” x 20					
38B16	0-13	DIN B16	51	92,5	104	Individual box	1010
38J6		JACOBS 6					
40B16	3-16	DIN B16	50,5	98	110	Individual box	1060
40B18		DIN B18					
40J6		JACOBS 6					
40J3		JACOBS 3					
40F12		Female thr. 1/2” x 20					
40F58		Female thr. 5/8” x 16					
50B22	5-20	B22	57	116	129	Individual box	1525
50J3		JACOBS 3					

Validus-PK keyless chucks, **industrial line, self tightening style** with a locking action ring suitable for **percussion** power tools, **right hand rotation only**

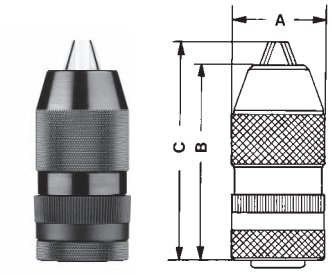

Model No.	Drilling capacity mm	Mount	A mm	B mm	C mm	Packaging style	Weight g
35PKF38	1-10	Female thr. 3/8” x 24	35,5	79,5	88	Individual box	420
35PKF12		Female thr. 1/2” x 20					410
37PKF38	1-13	Female thr. 3/8” x 24	43	86	100	Individual box	690
37PKF12		Female thr. 1/2” x 20					680

Super-Validus keyless chucks, **high accuracy industrial line**, for machine tools and production drilling machines, **self tightening style**

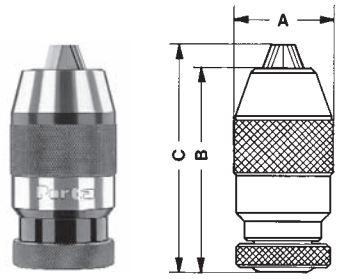

Model N.	Drilling capacity mm	Mount	A mm	B mm	C mm	Packaging style	Weight g
S24J1	0-3	JACOBS 1	24	45	49	Individual box	110
S32B12	0-6	DIN B12	36	65	73	Individual box	380
S32J1		JACOBS 1					
S34B12	0-8	DIN B12	36	65	73	Individual box	380
S34J2		JACOBS 2					
S36B16	0-10	DIN B16	45	81	93	Individual box	740
S36J2		JACOBS 2					
S36J33		JACOBS 33					
S38B16	0-13	DIN B16	51,5	93	105	Individual box	1070
S38J33		JACOBS 33					
S38J6		JACOBS 6					
S40B16	3-16	DIN B16	57,5	96	110	Individual box	1420
S40B18		DIN B18					
S40J6		JACOBS 6					

High precision self-tightening keyless chuck with **standard** jaws Maximum run-out 0.04mm

All components are heat treated and ground

Extremely accurate and precise chucks suitable for CNC machines and machine centres

Model No.	Drilling capacity mm	Mount	A mm	B mm	C mm	Packaging style	Weight g
PP06B10	0.3-6.5	B10	33.4	62.4	68.7	Individual box	298
PP06J1		JT1					
PP08B12	0.3-8	B12	37.6	68.4	71.2	Individual box	414
PP08J1		JT1					
PP08J2		JT2					
PP10B12	0.3-10	B12	42.8	80	91.5	Individual box	637
PP10B16		B16					650
PP10J2		JT2					
PP10J33		JT33					
PP13J2	0.3-13	JT2	50.4	91.2	104	Individual box	1003
PP13J33		JT33					
PP13J6		JT6					994
PP13B16		B16					1003
PP16J6	3-16	JT6	56.7	95.5	108.9	Individual box	1298
PP16J3		JT3		101.6	104.3		1292
PP16J33		JT33					1292
PP16B16		B16		95.6	108.7		1305
PP16B18		B18		103	106.2		1319

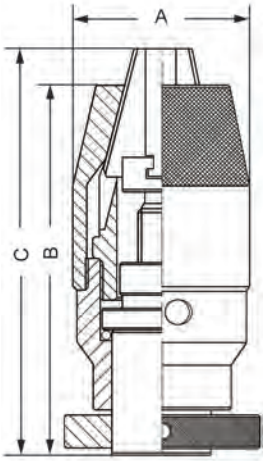

High precision self-tightening keyless chuck with **titanium** jaws Maximum run-out 0.04mm

All components are heat treated and ground

Extremely accurate and precise chucks suitable for CNC machines and machine centres

Supplied with spanner wrench to allow the application of supplementary gripping torque

The high tech titanium increases the grip and wear resistance of the jaw

Model No.	Drilling capacity mm	Mount	A mm	B mm	C mm	Packaging style	Weight g
PPT06B10	0.3-6.5	B10	33.4	62.4	68.7	Individual box	298
PPT06J1		JT1					
PPT08B12	0.3-8	B12	37.6	68.4	71.2	Individual box	414
PPT08J1		JT1					500
PPT08J2		JT2					
PPT10B12	0.3-10	B12	42.8	80	91.5	Individual box	637
PPT10B16		B16					617
PPT10J2		JT2					700
PPT10J33		JT33					
PPT13J2	0.3-13	JT2	50.4	91.2	104	Individual box	1003
PPT13J33		JT33					
PPT13J6		JT6					994
PPT13B16		B16					1003
PPT16J6	3-16	JT6	56.7	95.5	108.9	Individual box	1298
PPT16J3		JT3		101.6	104.3		1292
PPT16J33		JT33		95.6	108.7		
PPT16B16		B16		95.6	108.7		1305
PPT16B18		B18		103	106.2		1319

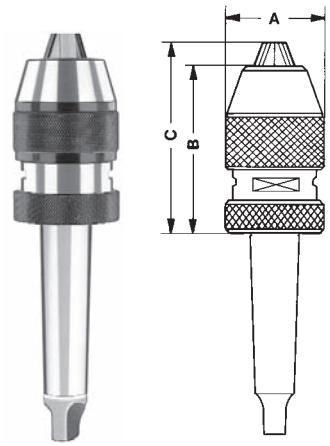

Porta **precision grade** keyless chucks for CNC machine tools and machining centres with **integral shank**

Model No.	Drilling capacity mm	Mount	A mm	B mm	C mm	Packaging style	Weight g
MT08MT2	0-8	2 Morse taper	37	67	74	Individual box	770
MT10MT2	0-10		41	81	89		990
MT13MT2	1-13	2 Morse taper	50,5	88	99		1200
MT13MT3		3 Morse taper					1360
MT13MT4		4 Morse taper					1628
MT13R8		R8 Bridgeport					1435
MT16MT2	3-16	2 Morse taper	56	95	108		1580
MT16MT3		3 Morse taper					1690
MT16MT4		4 Morse taper					1980
MT16R8		R8 Bridgeport					1650

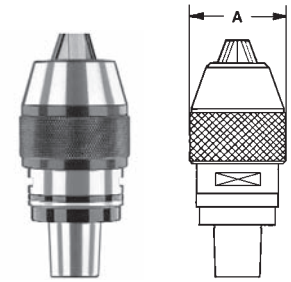

Porta **precision grade** spare chucks for integral shank keyless chucks

Model No.	Drilling capacity mm	Taper size	A mm	Packaging style	Weight g
MP08A	0-8	2 Morse taper	37	Individual box	365
MP10A	0-10		41		560
MP13A	1-13	3 Morse taper	46		785
MP16A	3-16				1100

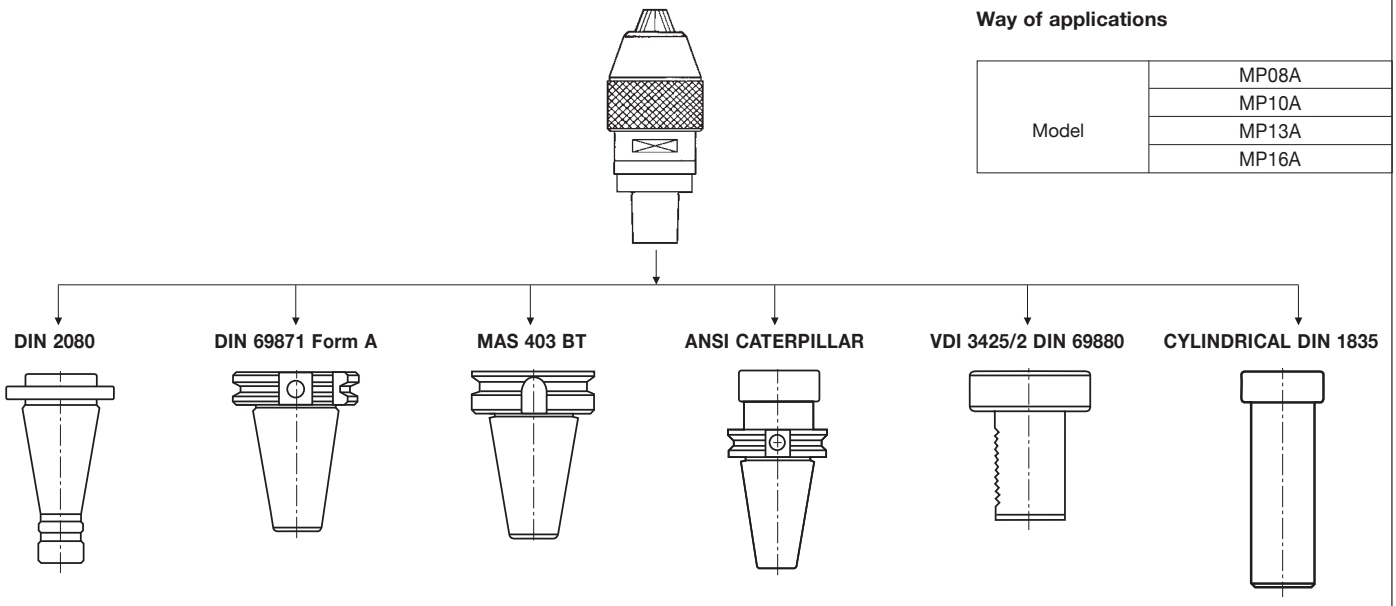

Way of applications

Model	MP08A
	MP10A
	MP13A
	MP16A

Porta **precision grade** keyless chucks with **integral shank** for CNC machine tools and machining centres supplied with milled wrench flats and spanner wrench to allow the application of supplementary gripping torque

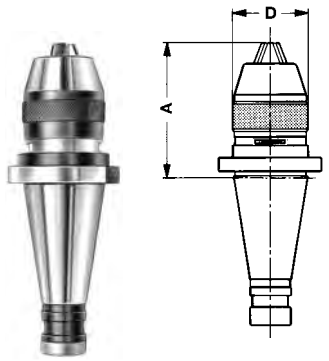

DIN 2080

Model No.	Drillling capacity mm	Iso taper size	Drawbolt thread	D mm	A mm min	A mm max	Packaging style	Weight g
MP0840D20	**0-8**	40	M16	36.50	57	64	Individual box	1005
MP1340D20	**1-13**	40	M16	48.50	78	90	Individual box	1395
MP1350D20		50	M24		75	87		3155
MP1640D20	**3-16**	40	M16	54.50	90	102	Individual box	1730
MP1650D20		50	M24		72	84		3295

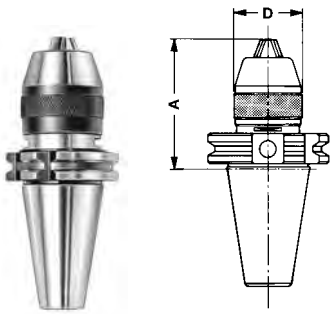

DIN 69871 Form A

Model No.	Drillling capacity mm	Iso taper size	Drawbolt thread	D mm	A mm min	A mm max	Packaging style	Weight g
MP0840D69A	**0-8**	40	M16	36.50	64	71	Individual box	1005
MP1340D69A	**1-13**	40	M16	48.50	80	92	Individual box	1380
MP1350D69A		50	M24		78	90		3170
MP1640D69A	**3-16**	40	M16	54.50	97	106	Individual box	1780
MP1650D69A		50	M24		76	88		3305

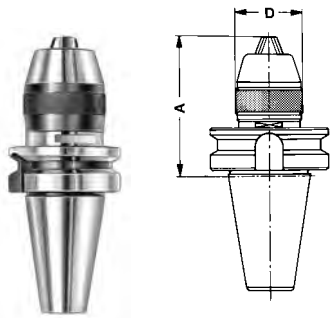

MAS 403 BT

Model No.	Drillling capacity mm	Iso taper size	Drawbolt thread	D mm	A mm min	A mm max	Packaging style	Weight g
MP0830MBT	**0-8**	30	M12	36.50	77	84	Individual box	695
MP0840MBT		40	M16		72	79		1200
MP1340MBT	**1-13**	40	M16	48.50	86	98	Individual box	1535
MP1350MBT		50	M24		97	109		4135
MP1640MBT	**3-16**	40	M16	54.50	105	117	Individual box	1935
MP1650MBT		50	M24		95	107		4275

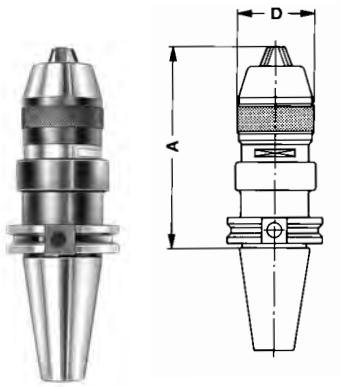

ANSI CAT

Model No.	Drillling capacity mm	Iso taper size	Drawbolt thread	D mm	A mm min	A mm max	Packaging style	Weight g
MP0840CAT	**0-8**	40	M16	36.50	82	89	Individual box	1255
MP1340CAT	**1-13**	40	M16	48.50	115	127	Individual box	1840
MP1350CAT		50	M24		96	108		3650
MP1640CAT	**3-16**	40	M16	54.50	120	132	Individual box	2230
MP1650CAT		50	M24		94	106		3825

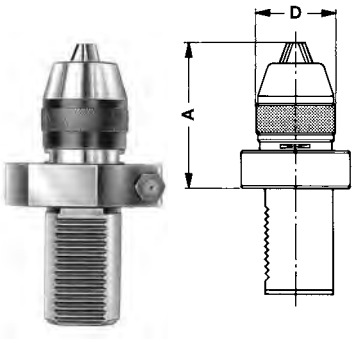

VDI 3425/2 DIN 69880

Model No.	Drilling capacity mm	Mount size	D mm	A mm min	A mm max	Packaging style	Weight g
MP1330VDI	**1-13**	NG16 X Ø30	48,50	108	120	Individual box	1715
MP1340VDI		NG20 X Ø40		81	93		1825
MP1640VDI	**3-16**	NG20 X Ø40	54,50	93	105	Individual box	2260
MP1650VDI		NG25 X Ø50		87	99		3150

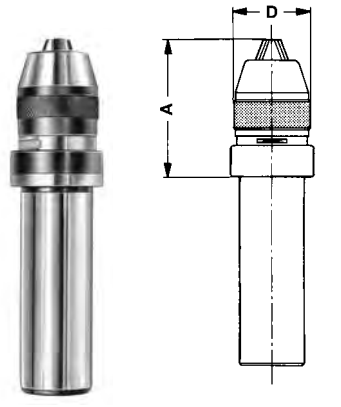

CYLINDRICAL DIN 1835

Model No.	Drilling capacity mm	Shank diameter mm	D mm	A mm min	A mm max	Packaging style	Weight g
MP0825CYL	**0-8**	25	36.50	65	72	Individual box	690
MP1332CYL	**1-13**	32	48.50	79	91	Individual box	1400
MP1340CYL		40					1890
MP1640CYL	**3-16**	40	54.50	83	95	Individual box	2225

Spare parts for keyless chucks (no more available for Validus industrial line)

Jaw carrier spindle

Set of jaws

SUPER VALIDUS
Catalogue page 3

Drilling capacity mm		Jaw carrier spindle	Set of jaws
0-6	Order ref.	X32420S	X32120S
0-8		X34440S	X34140S
0-10		X36460S	X36160S
0-13		X38480S	X38180S
3-16		X40490S	X40190S

PP High precision self-tightening keyless chuck with STANDARD jaws
Catalogue page 4

Drilling capacity mm		Jaw carrier spindle	Set of jaws
0-8	Order ref.	Y54420	Y54120
0-10		Y56460	Y56160
0-13		Y58480	Y58180
3-16		Y60490	Y60190

PPT High torque/high precision keyless chuck with TITANIUM jaws
Catalogue page 4

Drilling capacity mm		Jaw carrier spindle	Set of jaws
0-8	Order ref.	T54420	T54120
0-10		T56460	T56160
0-13		T58480	T58180
3-16		T60490	T60190

DIY Design **Keyless Chuck** - Hex Shank Quick Change

Application
- Recommended for Consumer Rotary Drills or Drill Drivers.
- Minimum standard 2.0” (50mm) hex bits are required to use Locking Hex feature.

Features and Benefits
- Locking Hex feature allows for rapid change of hex bits when doing drilling and driving operations without tightening the chuck.
- A snap ball in Hex Mount which provide max 9 lbf retention force.
- Chuck can still be used as normal with round shank bits.
- For larger diameter drill bits, where tightening the chuck would be recommended, Locking.

Hex feature would properly align jaws to hex flats on the drill shank.

Model No.	Chuck capacity mm	Mount	Screwdriver bit hole (mm)	DIA mm	Open length mm	Close length mm	Weight g
LD10F38RHEX	1,0-10	3/8-24	H1/4"	45,5	55,5	65	180
LD13F12RHEX	1,5-13	1/2-20	6,35	42,6	55	70	238

TAURUS range keyless chucks

Designed to exceed the performance of conventional drill chucks, the TAURUS range, represents a revolutionary new concept in technology and are precision engineered to enable the operator to lock the bit firmly in the chuck by hand.

- **Suitable for Forward, Reverse and Percussion**
- **Nylon and Full metal version**
- **Double and single sleeve** suitable for conventional and spindle lock machines
- **Antilock mechanism**
- **Standard and Carbide jaw bite**
- **High performance** for machines up to **1100 Watts** impact applications

Model numbers ending in letter R indicate chuck supplied with through hole to accommodate a left hand locking screw for reversing tools.
A TORX® wrench can also be used to lock the keyless chucks to the drilling machine spindle.
No left hand screw is needed in this case.

TAURUS REGULAR

Hard nylon two piece sleeve, metal nose cap, suitable for machines in forward and reverse mode. Hand tightening style.

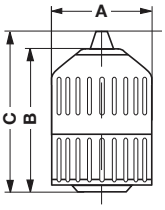

LD10

Model No.	Drilling capacity mm	Mount	A mm	B mm	C mm	Max machine rating	Packaging style	Weight g
LD10F12R	**1.5-10**	1/2" x 20	42.7	55	62	Suitable for machines in forward and reverse mode only	Individual box	182
LD10F12RB							Blister card	
LD10F38R		3/8" x 24					Individual box	
LD10F38RB							Blister card	

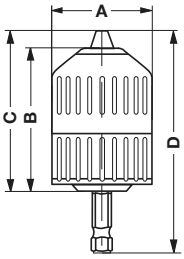

LD10X1

KEYLESS CHUCKS FOR SCREWDRIVERS

with 1/4" male hexagonal mount to DIN 3126 - E 6.3.

Model No.	Drilling capacity mm	A mm	B mm	C mm	D mm	Packaging style	Weight g
LD10X1B	**1.5-10**	42.7	55	62	80	Individual box	200

TAURUS PROFESSIONAL

Hard nylon two piece sleeve, metal nose cap, suitable for machines in forward, reverse and percussion mode. Hand tightening style.

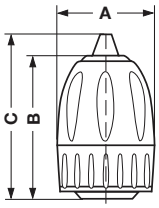

LDP10

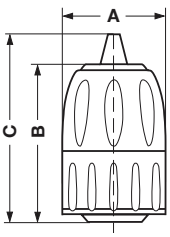

LDP13

Model No.	Drilling capacity mm	Mount	A mm	B mm	C mm	Max machine rating	Packaging style	Weight g
LDP10F12R	**1.5-10**	1/2" x 20	42.7	55	63	450 W	Individual box	172
LDP10F12RB							Blister card	
LDP10F38R		3/8" x 24					Individual box	
LDP10F38RB							Blister card	
LDP13F12R	**2-13**	1/2" x 20	42.7	62	76	710 W	Individual box	290
LDP13F12RB							Blister card	
LDP13F38R		3/8" x 24					Individual box	
LDP13F38RB							Blister card	
LDP13SDS		SDS					Individual box	330
LDP13SDSB							Blister card	

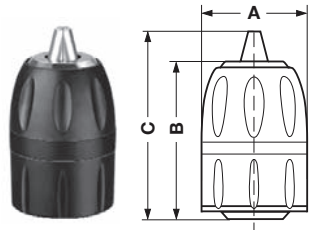

LDPS13

TAURUS PROFESSIONAL - SPINDLE LOCK SYSTEM

For machines with Spindle Lock system. Hard nylon single sleeve suitable for forward, reverse and percussion mode.

Model No.	Drilling capacity mm	Mount	A mm	B mm	C mm	Max machine rating	Packaging style	Weight g
LDPS13F12R	2-13	1/2" x 20	42.7	62	73	710 W	Individual box	280
LDPS13F12RB							Blister card	

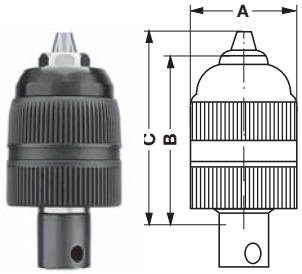

LDP10SQ

TAURUS PROFESSIONAL - FOR IMPACT DRIVERS

Model No.	Drilling capacity mm	Mount	A mm	B mm	C mm	Max torque	Packaging style	Weight g
LDP10SQ38	1-10	Quadro 3/8"	41	77	85	100 Nm	Individual box	232
LDP10SQ12		Quadro 1/2"	41	80	88			263

TAURUS SUPER suitable for forward, reverse and impact mode. standard jaws with serrated bite.

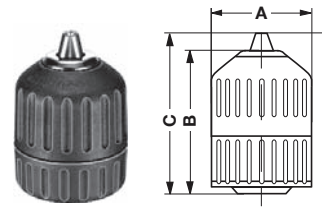

TSP10

Hard nylon two piece sleeve

Model No.	Drilling capacity mm	Mount	A mm	B mm	C mm	Max machine rating	Packaging style	Weight g
TSP10F12R	1.5-10	1/2" x 20	42.7	55	64	1100 W	Individual box	165
TSP10F12RB							Blister card	
TSP10F38R		3/8" x 24					Individual box	
TSP10F38RB							Blister card	

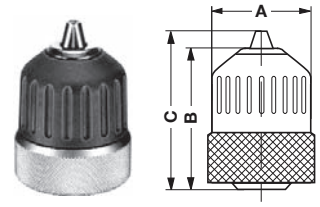

TSMP10

Hard nylon front sleeve and rear metal sleeve

Model No.	Drilling capacity mm	Mount	A mm	B mm	C mm	Max machine rating	Packaging style	Weight g
TSMP10F12R	1.5-10	1/2" x 20	42.7	55	64	1100 W	Individual box	195
TSMP10F12RB							Blister card	
TSMP10F38R		3/8" x 24					Individual box	
TSMP10F38RB							Blister card	

TSP13

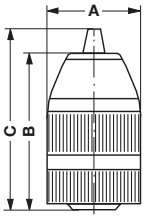

Hard nylon two piece sleeve

Model No.	Drilling capacity mm	Mount	A mm	B mm	C mm	Max machine rating	Packaging style	Weight g
TSP13F12R	1.5-13	1/2" x 20	42.7	64	75.3	1100 W	Individual box	260
TSP13F12RB							Blister card	

TS13

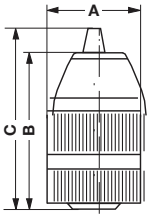

Full metal two piece sleeve

Model No.	Drilling capacity mm	Mount	A mm	B mm	C mm	Max machine rating	Packaging style	Weight g
TS13F12R	1.5-13	1/2" x 20	42.7	64	75.3	1100 W	Individual box	295
TS13F12RB							Blister card	
TS13F38R		3/8" x 24					Individual box	
TS13F38RB							Blister card	
TS13SDS		SDS					Individual box	340
TS13SDSB							Blister card	

TAURUS SUPER - SPINDLE LOCK SYSTEM

For machines with Spindle Lock system, suitable for forward, reverse and impact mode. Standard jaws with serrated bite.

TSSP10

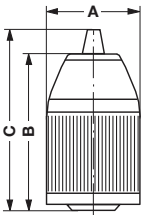

Hard nylon single sleeve

Model No.	Drilling capacity mm	Mount	A mm	B mm	C mm	Max machine rating	Packaging style	Weight g
TSSP10F12R	1.5-10	1/2" x 20	42.7	57.5	64	1100 W	Individual box	161
TSSP10F12RB							Blister card	
TSSP10F38R		3/8" x 24					Individual box	
TSSP10F38RB							Blister card	

TSS13

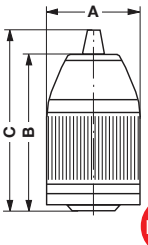

new

Full metal single sleeve

Model No.	Drilling capacity mm	Mount	A mm	B mm	C mm	Max machine rating	Packaging style	Weight g
TSS13F12R	1.5-13	1/2" x 20	42.7	64	75.3	1100 W	Individual box	295
TSS13F12RB							Blister card	
TSS13F916R		9/16" x 18	42.9	53.5	69	1100 W	Individual box	248
TSS13F916RB							Blister card	

TAURUS ULTIMATE

Suitable for forward, reverse and impact mode.
Carbide jaw bite to ensure better gripping.

TUP13

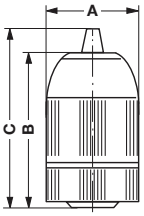

Hard nylon two piece sleeve

Model No.	Drilling capacity mm	Mount	A mm	B mm	C mm	Max machine rating	Packaging style	Weight g
TUP13F12R	**1.5-13**	1/2" x 20	42.7	63.5	75,3	1100 W	Individual box	248
TUP13F12RB							Blister card	

TUMP13

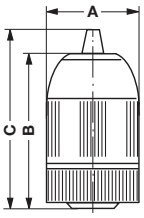

Hard nylon front sleeve and rear metal sleeve

Model No.	Drilling capacity mm	Mount	A mm	B mm	C mm	Max machine rating	Packaging style	Weight g
TUMP13F12R	**1.5-13**	1/2" x 20	42.7	63.5	75.3	1100 W	Individual box	282
TUMP13F12RB							Blister card	

TU13

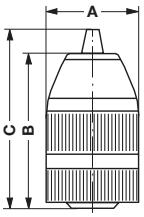

Full metal two piece sleeve

Model No.	Drilling capacity mm	Mount	A mm	B mm	C mm	Max machine rating	Packaging style	Weight g
TU13F12R	**1.5-13**	1/2" x 20	42.7	63.5	75.3	1100 W	Individual box	282
TU13F12RB							Blister card	

TAURUS ULTIMATE - SPINDLE LOCK SYSTEM

For machines with Spindle Lock system, suitable for forward, reverse and impact mode. Carbide jaws.

TUS13

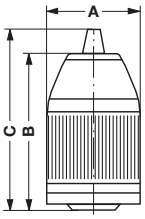

Model No.	Drilling capacity mm	Mount	A mm	B mm	C mm	Max machine rating	Packaging style	Weight g
TUS13F12R	**1.5-13**	1/2" x 20	42.7	64	75.3	1100 W	Individual box	295
TUS13F12RB							Blister card	

new

Impact Chucks

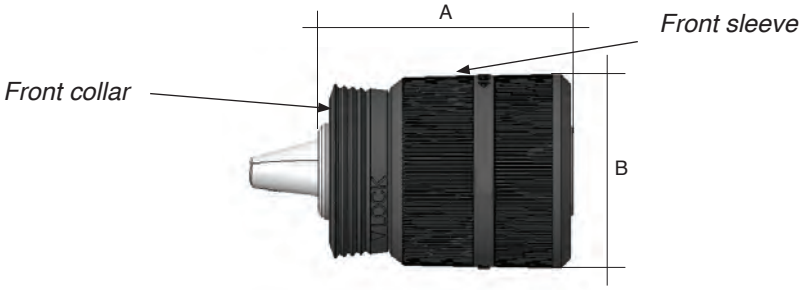

Feature

Capacity mm	Material of sleeve	Jaws	A mm	B mm	Weight gr	Pull force of front collar
1,6-13	Plastic	Carbide	56	42,7	260	20N+/-10N

How to use the chuck

STEP 1:
Pull out the front collar by hand.

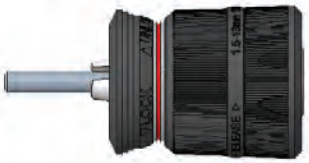

STEP 2:
Like a traditional chuck, rotate front sleeve to open and close the chuck.

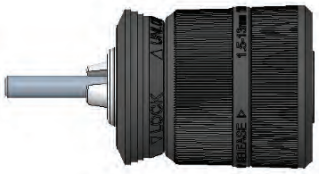

STEP 3:
After chuck is tightened on the bit, press the front collar by hand to lock the sleeve.

Available models

Model	Mount	Max torque	Application
TUPID13F12R	1/2 thread	113 N.m	Drill

Model	Mount	Max torque	Application
TUPID13X1	1/4 hex	67 N.m	Impact driver

Model	Mount	Max torque	Application
TUPID13SQ12	1/2 square	113N.m	Impact wrench

Key operated chucks

Medium duty for professional users of power tools, bench drilling machines, and woodworking machinery.
Heavy duty for production drilling machines and industrial power tools.

Packed in individual cartons with key

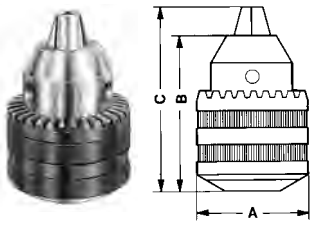

	Model No.	Drilling capacity mm	Mount	Through hole diameter mm	With key	A	B	C	Range	Weight g
	A04J0	0.5-4	JACOBS 0	–	K0	22	29	35	Medium duty	80
	A06B10	0.3-6	DIN B10	–	KS1	32	40	50	Medium duty	135
*	A06J1		JACOBS 1	–						
	A06F38	0.5-6	Female thr. 3/8” x 24	–						
	A06F38R		Female thr. 3/8” x 24	5,5						
	A08B12	0.3-8	DIN B12	–	KS1	30	44	54	Medium duty	140
	A08J1		JACOBS 1	–						
	A08F38		Female thr. 3/8” x 24	–						
	A08F38R		Female thr. 3/8” x 24	5,5						
*	AP08J2		JACOBS 2		KS2	37	51	60	Heavy duty	225
	A10B12	0.5-10	DIN B12	–	KS2	36,5	51	60	Medium duty	220
	A10F38		Female thr. 3/8” x 24	–						
	A10F38R		Female thr. 3/8” x 24	5,5						
	A10F12		Female thr. 1/2” x 20	–						
	A10F12R		Female thr. 1/2” x 20	6,5						
*	AP10B16	0.5-10	DIN B16	–	KS2	42,7	62	76	Heavy duty	375
*	AP10J2		JACOBS 2							
	A13B12	1.5-13	DIN B12	–	KS2	42,5	59	73	Medium duty	370
	A13B16		DIN B16	–						
	A13J6		JACOBS 6	–						
	A13J33		JACOBS 33	–						
	A13F38		Female thr. 3/8” x 24	–						
	A13F38R		Female thr. 3/8” x 24	5,5						
	A13F12		Female thr. 1/2” x 20	–						
	A13F12R		Female thr. 1/2” x 20	6,5						
	AP13B16	0.5-13	DIN B16	–	KS3	53	66	89	Heavy duty	615
	AP13J6		JACOBS 6							
	AP13J2		JACOBS 2			51	72	92		635
	AP13J33		JACOBS 33			53	66	89		615
	AP13F58		Female thr. 5/8” x 16							635
	AP16B16	2.5-16	DIN B16	–	KS3	54	67	86	Medium duty	627
	AP16B18		DIN B18							
	AP16J6		JACOBS 6							
	AP16J33		JACOBS 33							
	AP16F12		Female thr. 1/2” x 20							
	AP16F12R		Female thr. 1/2” x 20	6.5						
	AP16F58		Female thr. 5/8” x 16	–						
	AP16F58R		Female thr. 5/8” x 16	6.5						
	APP16B18	0.5-16	DIN B18	–	KS3	57	79	102	Heavy duty	880
	APP16J6		JACOBS 6							
	APP16J3		JACOBS 3							
	APP16F58		Female thr. 5/8” x 16							
	AP20B22	5-20	DIN B22	–	KS4	64	92	116	Heavy duty	1095
	AP20J3		JACOBS 3							
*	AP20F34		Female thr. 3/4” x 16		KS3	62	80	99		913
*	AP20F58		Female thr. 5/8” x 16		KS4					
	AP26B24	5-26	DIN B24	–	KS4	75	144	139	Heavy duty	2095
	AP26J4		JACOBS 4							

R Model numbers ending in letter R indicate chuck supplied with through hole to accomadate a left hand locking screw for reversiong tools

* Clearance sale

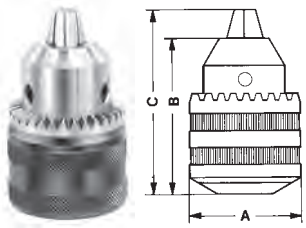

Standard duty key operated chucks
the popular chucks for portable power tools

Model numbers ending in letter R indicate chuck supplied with through hole to accommodate a left hand locking screw for reversing tools.

Model No.	Drilling capacity mm	Mount	Through hole diameter mm	With key	A mm	B mm	C mm	Packaging style	Weight g
AH06F38R	0-6	Female thr. 3/8” x 24	5,5	KH810	30	40	50,5	Individual box	112
AH06F38RB								Blister card	
AH10B12	1.5-10	DIN B12	–	KH810	33	49	60	Individual box	160
AH10M38		Male thr. 3/8” x 24	–					Individual box	180
AH10M38B		Male thr. 3/8” x 24	–					Blister card	180
AH10F38		Female thr. 3/8” x 24	–					Individual box	165
AH10F38R		Female thr. 3/8” x 24	5,5					Individual box	165
AH10F38B		Female thr. 3/8” x 24	–					Blister card	165
AH10F38RB		Female thr. 3/8” x 24	5,5					Blister card	160
AH10F12		Female thr. 1/2” x 20	–					Individual box	160
AH10F12R		Female thr. 1/2” x 20	6,5					Individual box	160
AH10F12B		Female thr. 1/2” x 20	–					Blister card	160
AH10F12RB		Female thr. 1/2” x 20	6,5					Blister card	160
AH13B12	1.5-13	DIN B12	–	KS2	42,5	59	74	Individual box	280
AH13B16		DIN B16	–					Individual box	280
AH13M38		Male thr. 3/8” x 24	–					Individual box	295
AH13M38B		Male thr. 3/8” x 24	–					Blister card	295
AH13F38		Female thr. 3/8” x 24	–					Individual box	285
AH13F38R		Female thr. 3/8” x 24	5,5					Individual box	285
AH13F38B		Female thr. 3/8” x 24	–					Blister card	285
AH13F38RB		Female thr. 3/8” x 24	5,5					Blister card	280
AH13F12		Female thr. 1/2” x 20	–					Individual box	280
AH13F12R		Female thr. 1/2” x 20	6,5					Individual box	280
AH13F12B		Female thr. 1/2” x 20	–					Blister card	280
AH13F12RB		Female thr. 1/2” x 20	6,5					Blister card	280
AH13SDS		SDS	6,5					Individual box	330
AH13SDSB		SDS	6,5					Blister card	330
AH16F12R	3-16	Female thr. 1/2” x 20	6,5	KS3	49,5	68	87,5	Individual box	604

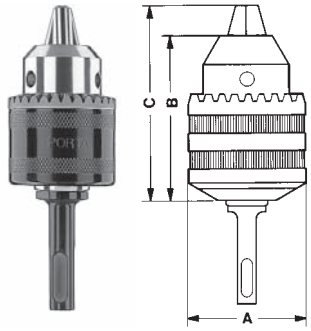

AH13SDS

Key operated chucks **for screwdrivers**
with 1/4” hexagonal male mount to DIN 3126 - E 6.3

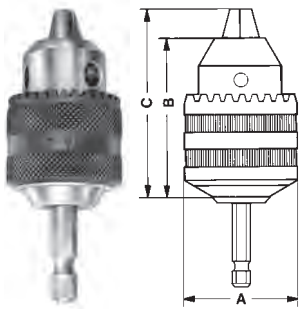

Model No.	Drilling capacity mm	With key	A mm	B mm	C mm	Packaging style	Weight g
AH06X1	0-6	KH810	30	40	50,5	Individual box	126
AH06X1B						Blister card	
AH10X1	1.5-10	KH810	33	49	60	Individual box	180
AH10X1B						Blister card	

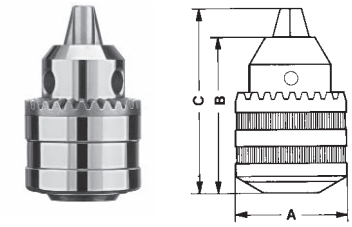

Standard duty key operated chucks **nickel plated**

Model No.	Drilling capacity mm	Mount	Through hole diameter mm	With key	A mm	B mm	C mm	Packaging stype	Weight g
~~AH06F06RNP~~	0-6	Female thr. 3/8" x 24	5.5	KH810	30	40	50.5	Individual box	107
AH10F38RNP	1.5-10	Female thr. 3/8" x 24	5.5		33	40	58.6		120
~~AH10F12RNP~~		Female thr. 1/2" x 20	6.5						

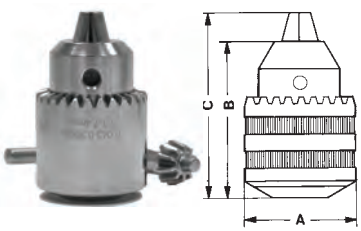

Stainless steel key operated chucks for use specifically in medical, chemical and food sector

Model No.	Drilling capacity mm	Mount	With key	A mm	B mm	C mm	Packaging style	Weight g
SSA04J0	0.3-4mm	JT0	SS-K0	22	28	35	Individual box	66
SSA06J1	0.3-6.5mm	JT1	SS-S1	28.5	40.5	49		165
SSA06F38		3/8-24UNF						170
SSA10J2	0.3-10mm	JT2S	SS-S2	39	51	63		295
SSA10F38		3/8-24UNF						

Ball-bearing drill chuck with key - for production drilling equipment.

Drill chuck with key for industrial applications that require the toughest machining conditions. Equipped with ball bearing to reduce friction in the tightening mechanism and provide a better grip on the drill shaft.
All pieces are hardened and ground. Range up to 25 mm capacity

Model No.	Jacobs equivalent	Capacity mm	Mount	Key type	A mm	B mm	C mm	Packaging style	Weight
APBB10J2	11N	1-10	JT2	KS8	43	56	72	Individual box	215
APBB13J3	14N	1-13	JT3	KS3	53	73	96		615
APBB16J3	16N	3-16	JT3	KS3	53	74	97		645
APBB20J4	18N	5-20	JT4	KS4A	64	96	121		1095
*APBB25J5	20N	10-25	JT5	KS4	93	107	145		2085

*clearance sale

Hammer key type drill chucks with SDS Adaptor.

APPLICATION: For hammer drilling in concrete, stone, etc.
TECHNICAL FEATURE: Clockwise and counterclockwise rotation;
chuck end play for transmitting the entire impact onto the drill;
SDS adaptor; reliable axial locking structure; rubber cap for dust protection;
suitable for up to 1050 Watt impact drill or up to 750 Watt hammer drill.

Model No.	Capacity mm	Mount	Ø Max mm	Lenth mm	Key size	Packaging style	Weight gr
A13PKSDS	1,5-1 3	SDS	42, 9	81,5	KS2PK with long welded handle	Individual box	420

Chuck keys

Model No.	Key model	Standard	A mm	Teeth No.	For key chucks type	Packaging style	Weight g
KS1	**KS1**	DIN S1	4	10	A06-A08	Bulk	10
KS1B						Blister card	
KS1P50						50 pcs. box	
KS2	**KS2**	DIN S2	6	12	AP08-AP10-A10 A13-A16-AH13	Bulk	40
KS2B						Blister card	
KS2P50						50 pcs. box	
KS2PK	**KS2PK**	DIN S2	6	12	A13F12PKR	Bulk	59
KS3	**KS3**	DIN S3	8	12	AP13-AP16 APP16	Bulk	80
KS3B						Blister card	
KS3P25						25 pcs. box	
KH810	**KH810**	DIN S14 JACOBS KG	6	11	AH08-AH10	Bulk	20
KH810B						Blister card	
KH810P50						50 pcs. box	
K20	**K20**	DIN S13 JACOBS K4	9,5	12	–	Bulk	120
KS8	**KS8**	DIN S8 JACOBS K30S	6	10	Black & Decker 13 mm	Bulk	40
KS8B						Blister card	
KS8P50						50 pcs. box	
K1	**K1**	DIN S7 JACOBS K1	4	11	–	Bulk	10
K1B						Blister card	
K2	**K2**	JACOBS K2	6,3	11	–	Bulk	40
K2B						Blister card	
K32	**K32**	DIN S9 JACOBS K32	6,3	10	–	Bulk	60
K32B						Blister card	
KS10	**KS10**	DIN S10 JACOBS K3	8	11	–	Bulk	70
KS10B						Blister card	
KS4	**KS4**	DIN S4	9	14	AP20 - AP26	Bulk	150
KS4B						Blister card	
K0	**K0**	JACOBS K0	3	11	A04	Bulk	20
K0B						Blister card	
KJ6	**KJ6**	CK-3	4	12	Makita 6 mm	Bulk	36
KJ6B						Blister card	
KJ10	**KJ10**	CK-4	5,5	12	Makita 10 mm	Bulk	53
KJ10B						Blister card	
KJ13	**KJ13**	CK-5	6,5	12	Makita 13 mm	Bulk	61
KJ13B						Blister card	
KL0	Rubber strap to attach key on power tool cable					Bulk	–

Morse taper ejecting drifts according to DIN 317, hardened and black oxide special steel

Model No.	Morse taper	Lenght mm	Packaging style	Weight g
DR0	**0**	90	Bulk	14
DR12	**1-2**	140		70
DR23	**2-3**	148		80
DR34	**3-4**	190		150
DR45	**4-5**	225		310
DR56	**5-6**	265		650

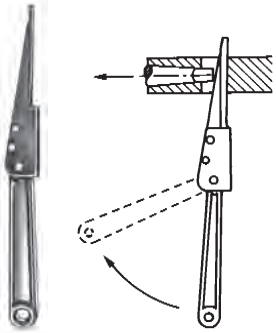

Automatic Morse taper ejecting drifts

Model No.	Morse taper	Lenght mm	Packaging style	Weight g
DRA123	**1-2-3**	322	Bulk	
DRA456	**4-5-6**	384		580

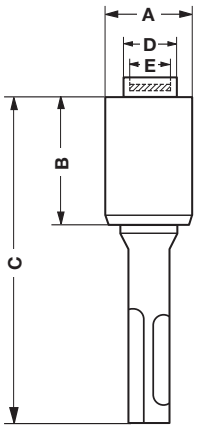

Nail attachment with SDS adaptor to be fitted in a percussion power tool. A magnetic disc on front side provide nail catching for a quick and easy riveting.

Model No.	A mm	B mm	C mm	D mm	E Max size of nail head mm	Packaging style	Weight g
NASDS	23	29	78	13	10	Individual box	100
NASDSB						Blister card	

Right angle drill attachment

- The right angle drill attachment enables drilling of holes where no other conventional drill will fit.
- Fits to any drill with 10 mm or larger capacity chuck.
- The right angle drill attachment is equipped with a 3/8” x 24 threaded mount and can be supplied:
  1) Without chuck code RADA
  2) With key type chuck code RADACK
  3) With keyless chuck code RADACL
- Double heat treated helical gear.
- Aluminum alloy metal housing industrial quality guaranteed.
- Gear ratio 1:1,3
- Max drilling capacity:
  10 mm in steel
  16 mm in wood.
- Maximum speed: 2.100 rpm.
- Max torque: 29,4 Nm.

Model No.	Packaging style	Weight g
RADA	Individual box	310
RADAB	Blister card	

RADA

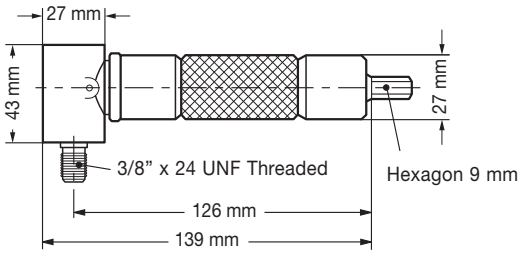

This model for screw driving applications only. It’s equipped with magnetic hexagon hole to insert screwing bits.

Model No.	Packaging style	Weight g
RADAX	Individual box	315
RADAXB	Blister card	

RADAX

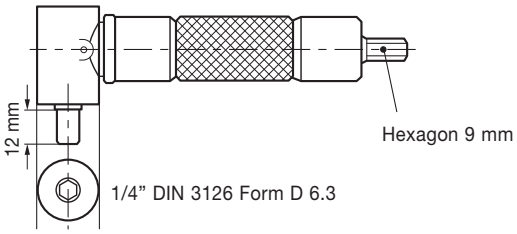

Model No.	Packaging style	Weight g
RADAV	Individual box	315
RADAVB	Blister card	

RADAV

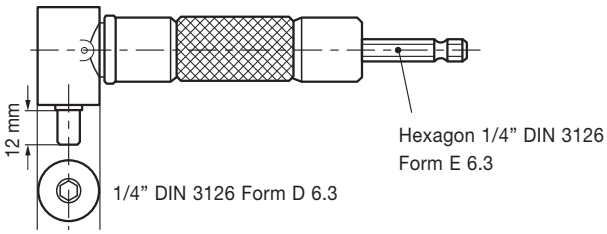

Model No.	Packaging style	Weight g
RADACK	Individual box	455

RADACK

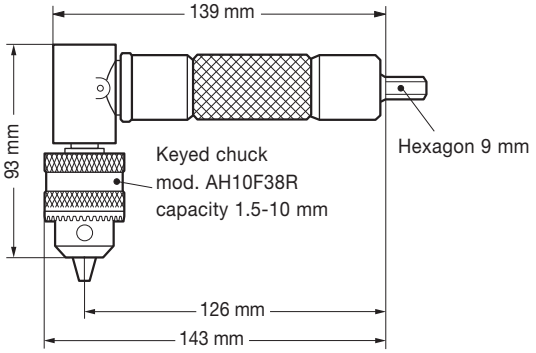

Model No.	Packaging style	Weight g
RADACL	Individual box	490

RADACL

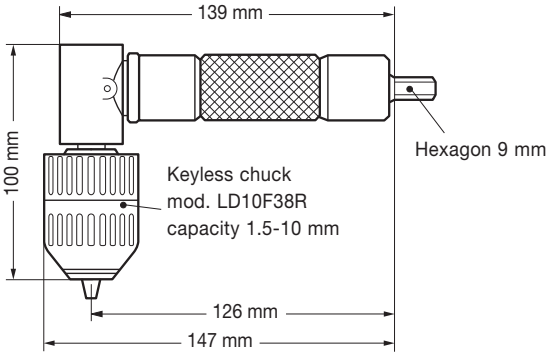

Spare parts

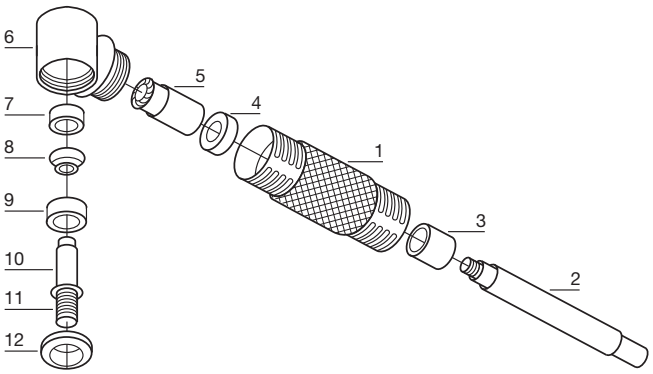

Model No.	Item No.	Description	Quantity
XRADA01	**1**	Body with bushing	1
XRADA02	**2**	Clutch pin	1
XRADA03	**3**	Needle bearing	1
XRADA04	**4**	Ball bearing	1
XRADA05	**5**	Bevel gear pin	1
XRADA06	**6**	Angle head	1
XRADA07	**7**	Ball bearing	1
XRADA08	**8**	Bevel gear	1
XRADA09	**9**	Ball bearing	1
XRADA10	**10**	Key	1
XRADA11	**11**	Chuck casing	1
XRADA12	**12**	Bearing cap	1

Professional right angle drill attachment

Model No.	Packaging style	Weight g
RADAQXPRO	Individual box	689

Heavy duty Professional RADA with quick release bit holder (9H) and handle.
MAX Torque 100 N.m.
Gear Ratio: 1:1.28
Code: RADAQXPRO

Model No.	Packaging style	Weight g
RADAPRO	Individual box	670

Heavy duty Professional RADA with 3/8” x 24 threaded head to fasten a chuck and handle.
MAX Torque 100 N.m.
Gear Ratio: 1:1.28
Code: RADAPRO

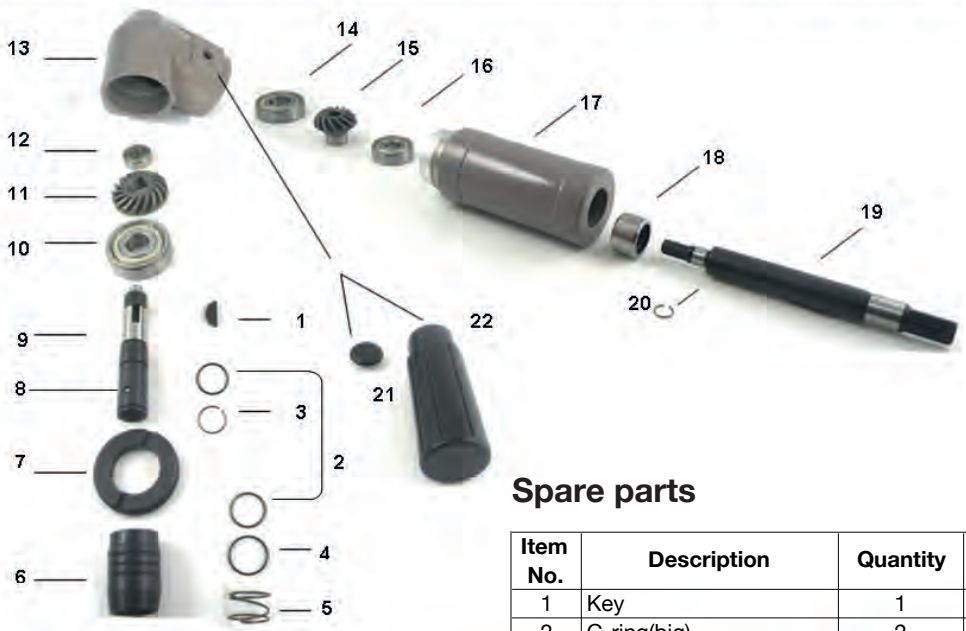

Spare parts

Item No.	Description	Quantity	Item No.	Description	Quantity
1	Key	1	12	Bearing	1
2	C-ring(big)	2	13	Angle Head	1
3	C-ring(mid)	1	14	Bearing	1
4	Washer	1	15	Gear	1
5	Spring	1	16	Bearing	1
6	Shell of quick release	1	17	Body With Bushing	1
7	Bearing Cap	1	18	Bearing	1
8	Ball	2	19	Clutch Pin	1
9	Chuck Casing	1	20	C-ring(small)	1
10	Bearing	1	21	Dust plug	3
11	Gear	1	22	Handle	1

360° right angle drill attachment

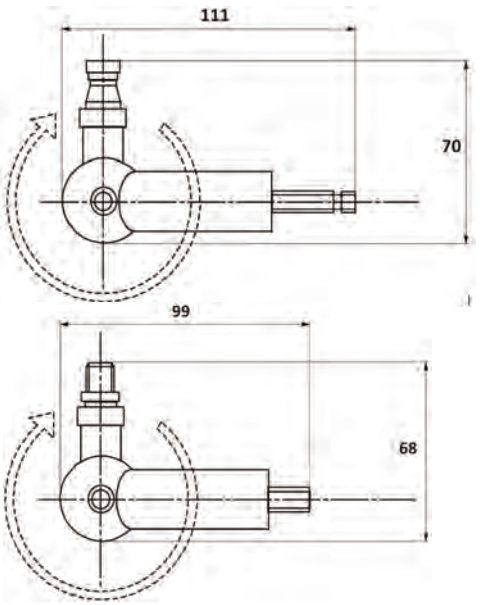

- This right angle drill attachment with a 360° full rotation enables drilling of holes and screwdriving where no other conventional drill will fit.
- It can be fitted on all standard power tools and screw drivers.
- A T Key wrench available in the package can lock the tool at the desired angle.

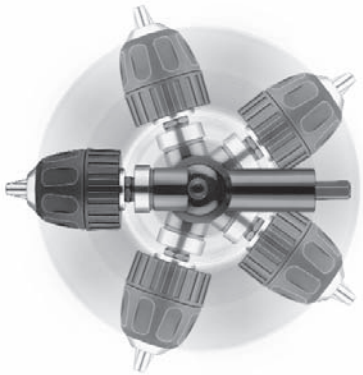

ON DRILLING POWER TOOLS

- max. speed: 3500 rpm
- max torque: 35 Nm

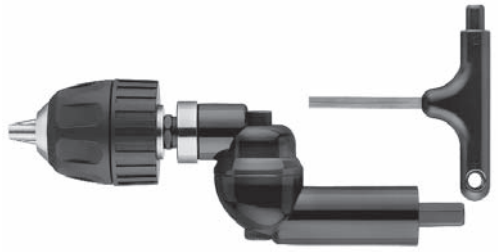

DRILLING HOLES

Mod. **RADA360CL**
With a keyless chuck mod. LD10B3R
cap. 1.5-10 mm

Packaging style: individual box
Weight g: 465

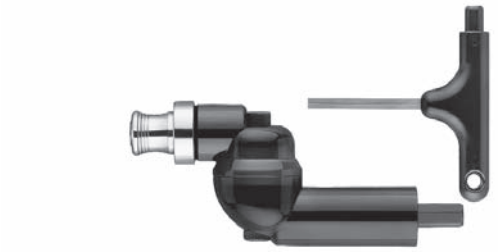

SCREWDRIVING

Mod. **RADAQ360**
With a quick change chuck for bits

Packaging style: individual box
Weight g: 301

ON SCREWDRIVERS

- max. speed: 3500 rpm
- max torque: 35 Nm

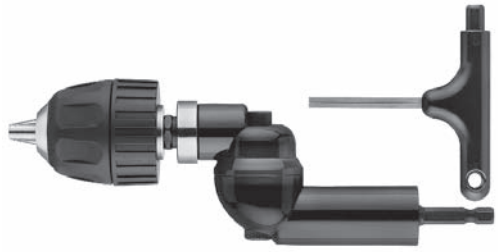

DRILLING HOLES

Mod. **RADAV360CL**
With a keyless chuck mod. LD10B3R
cap. 1.5-10 mm

Packaging style: individual box
Weight g: 465

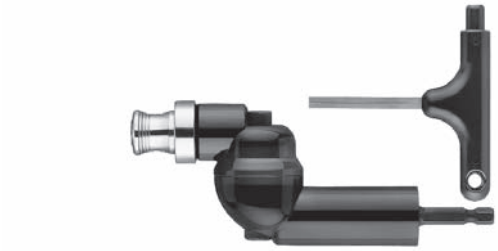

SCREWDRIVING

Mod. **RADAQV360**
With a quick change chuck for bits

Packaging style: individual box
Weight g: 301

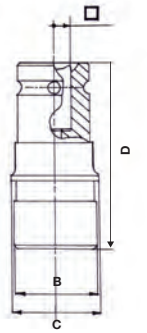

Quick change SDS converter for regular percussion power tools

New serie with 1/2” square drive

This adapter, mounted on an electric or pneumatic tool with a 1/2 " square drive allows use of SDS drill bits. Furthermore the RACSDSIH special adapter allows the drill to become a screwdriver. The replacement of the SDS bit occurs very easily through a spring ring sliding on the spindle axis. In fact, by gripping the ring, the weight of the drill opens the hooking device.

All the spindle components are made of treated steel.

Model No.	Power tool nose	A mm	B mm	C mm	D mm	Packaging style	Weight g
SDSCONV	Dr 1/2” Square	25	28	30	58	Individual box	160
SDSCONVB						Blister card	

DIFFERENT WAYS OF APPLICATION

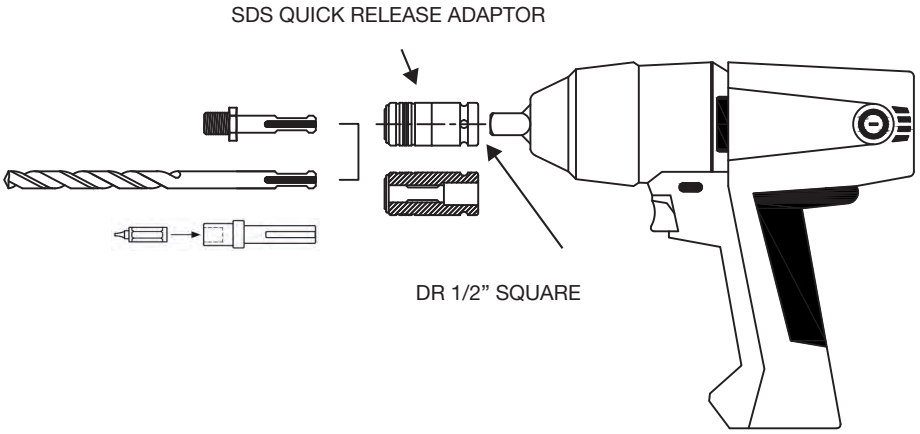

Drilling and screwing bits quick change holder set

Tool set includes 1/4” quick release chuck with 3/8” hexagon shank to be fitted in a power tool and three unique drill and drive bit combinations which enable easy and fast way to change tool for drilling hole and screwing.

Model No.	A mm	B mm	Packaging style	Weight g
DSTS	20.5	54	Blister card	90

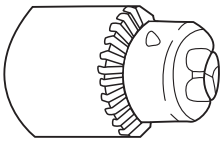

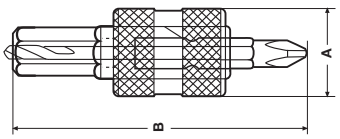

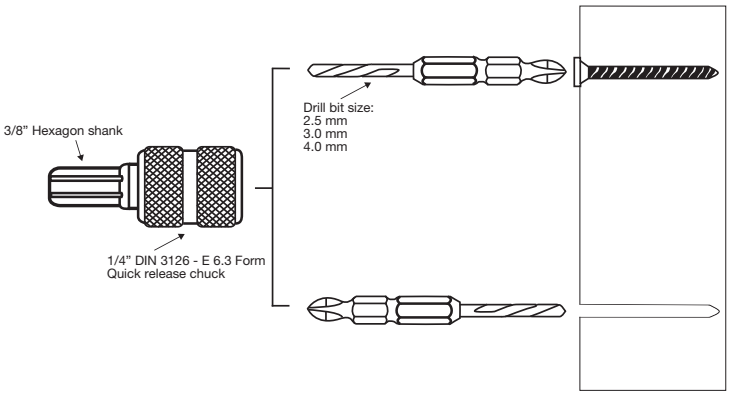

Rivet Converter

New Serie: Cast Aluminium body.

Simply convert the standard cordless, electric, pneumatic, drill/drive into a blind rivet gun.
Accept 3/8” and 1/2” (10/13mm) drill chuck or 1/4” (6.35mm) hex recess.
Compatible with 12V, 14.4V and 18V cordless drill/drive and any reversible corded drill I drive.

Pull: Aluminium rivets: 2.4-4.8mm
Stainless steel rivets: 2.4-4.0mm

Comes complete 2.4-3.2-4.0-4.8mm (3/32”-1/8”-5/32”-3/16”) 4 nosepieces.
Max rmp: 1000 rpm.
The shank of rivet is expelled when the drill is operated in the “reverse” mode.
If used with a combination impact drill, ensure that it is set to drilling mode.

Model no.	Mount	Aluminium rivets size mm	Steel rivets size mm	Max Speed	Packaging style	Weight g
	1/4" DIN 3126 Form E 6.3	from 2,4 a 4, 8	from 2,4 a 4,0	1000 rpm	Individual box	280

1. Hexagon shank ¼” Din 3126 Form E 6.3
2. Housing: die ca st aluminium
3. Nosepiece: mm 2.4 – 3.2 – 4.0 – 4.8
4. Sight window: Blind rivet loading
5. Wrench with interchangeable noses

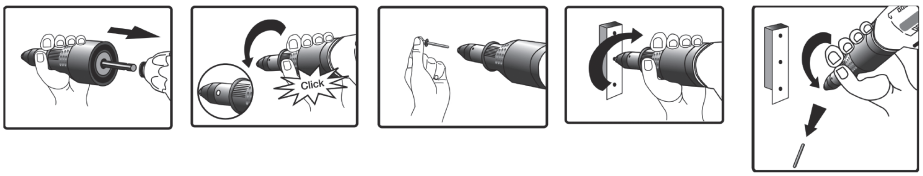

Chuck extender for portable drill

Hand drills are often limited in use by the bulk of the drill’s body.
This 300mm chuck extender makes it possible to do many more things with a hand held drill by giving access to areas that would normally be unreachable.
The sliding aluminium handle on the chuck extender lets you apply greater lateral force on attachments with all the stress being absorbed by the extender, not the drill.

The Chuck Extender with hexagon 9 mm taper can be supplied with:

Key operated chuck , female thr. 3/8”-24UNF,
capacity 1,5-10mm, with standard key DIN S14,
Porta’s model number AH10F38R
Model PMK

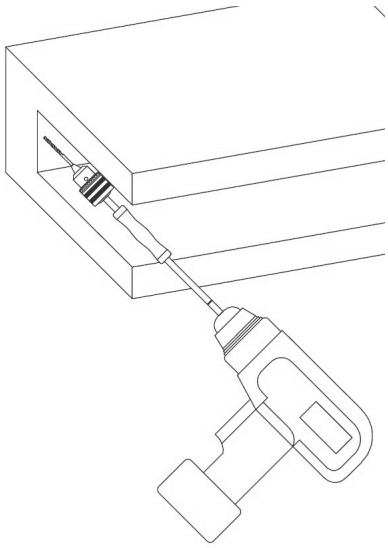

Keyless chuck, female thr. 3/8”-24UNF,
capacity 1,5-10mm,
Porta’s model number LD10F38R
Model PML

Model No.	Mount	Drilling Capacity mm	Key	Porta chuck	Weight g
PMK	3/8"-24 UNF	1,5-10	DIN S14	AH10F38R	400
PML	3/8"-24 UNF	1,5-10	-	LD10F38R	390

Flexible bit holder for screwdriver

With ¼"hexagon Din 3126 E 6,3 driver for screwdrivers on one side and a quick change ¼" hexagon bit holder on the other side

Model no.	Length mm	Max speed RMP	Max torque kgf/cm	Packaging	Weight g
RACFLEX 2	200	3000	165	Individual box	200
RACFLEX 3	300		135		300
RACFLEX 4	400		135		400

Flexible shaft with spring chuck

Available in two models: DIY and High Speed

Model no.	Length mm	Max speed RMP	Max torque kgf/cm	Packaging	Weight g
FS06DIY	1000	6000	Goodel 6mm	Individual box	700
FS06HS	1300	15000	Goodel 6mm	Individual box	900
FS10HS			Goodel 10mm		940

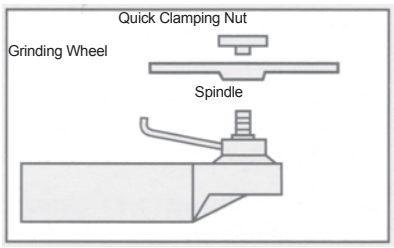

Quick clamping nut

TECHNICAL FEATURE: Suitable for grinding/cutting discs from 100 mm up to 230 mm and angle grinder power below 2400 W.
Easy tightening and release.
Available mount size: M14.

HOW TO INSTALL IT:
Place grinding/cutting wheel on spindle, making sure wheel is centered on flange.
Place the Quick Clamping Nut onto spindle, rotate clockwise and lock (2-4 Nm).

HOW TO REMOVE IT:
Grip the outer ring of the Quick Clamping Nutby hand and release it counterclockwise from the grinder spindle (2-4 Nm).

Model No.	Ø mm	Thikness mm	Thread
QCNM1 4	46,5	13,4	M14

Chuck adaptors

RACSDSV1 RACSDSIH

Model No.	Style	Description	Packaging style	Weight g
RACSDSV1	BOSCH SDS+	To convert SDS and other direct drive systems to accept 1/2" x 20 female chuck for rotary only work Supplied complete with M6 left hand threaded retaining screw	Individual box	55
RACSDSV1B			Blister card	55
RACSDSIH magnetic	BOSCH SDS+	To convert SDS system to accept tools with 1/4" hexagon shanks for rotary rotation work	Bulk	50
RACSDSIHB magnetic			Blister card	

Model No.	Description	Packaging style	Weight g
RACX1	1/4" DIN 3126 Form E 6,3 hexagon shank with 3/8" x 24 threaded mount	Bulk	20

Model No.	Description	Packaging style	Weight g
VSR10D5	M5 left hand thread spare screw total lenght 18 mm for use with 10 mm 3/8" x 24 threaded keyed chucks	Bulk	6
VSR10D6	M6 left hand thread spare screw total lenght 23 mm for use with 10 mm 1/2" x 20 threaded keyed chucks		
VSR13D6	M6 left hand thread spare screw total lenght 27 mm for use with SDS adaptors and 13 mm 1/2" x 20 threaded keyed chucks		

Model No.	Description	Packaging style	Weight g
RAC3812M	To convert 1/2" x 20 female to 3/8" x 24 male	Individual box	26
RAC3812MB		Blister card	
RAC3838M	To convert 3/8" x 24 female to 3/8" x 24 male	Individual box	19
RAC3838MB		Blister card	

Model No.	Description	Packaging style	Weight g
RAC3812F	To convert 1/2" x 20 female to 3/8" x 24 female	Individual box	11
RAC3812FB		Blister card	

Chuck adaptors

Model No.	Description
RACX1SQ38B	¼” hexagon adaptor to 3/8” square drive

Model No.	Description
RACX1WBHB	¼” wobble type adaptor • locked: straight position • unlocked: wobble position up to 25°

Model No.	Description
RAC12SQ38B	Convert ½” x 20 thread to 3/8” square drive
RAC12SQ12B	Convert ½” x 20 thread to ½” square drive

Quick release ¼” hexagon bit holders

Model No.	Description
RAC14HSQ14B	To be fitted on ¼” square drive machine
RAC14HSQ38B	To be fitted on 3/8” square drive machine
RAC14HSQ12B	To be fitted on ½” square drive machine
RAC14HT38B	To be fitted on 3/8” x 24 threaded mount machine
RAC14HT12B	To be fitted on ½” x 20 threaded mount machine

Morse taper arbors with taper and threaded mounts, precision ground, hardened and tempered

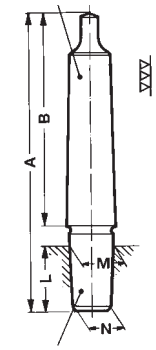

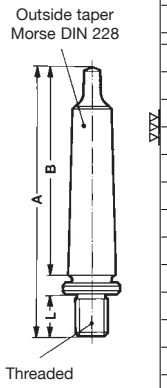

Model No.	Morse tapper DIN 228	Chuck mount	A mm	B mm	M mm	N mm	L mm	Packaging style	Weight g
C1B10	1	DIN B10	83	65,5	10,094	9,4	14,5	Individual box	55
C1B12		DIN B12	89		12,065	11,1	18,5		65
C1B16		DIN B16	99		15,733	14,5	24		90
C1B18		DIN B18	99		17,78	16,2	32		110
C1J1		JACOBS 1	86		9,754	8,468	16,67		50
C1J2		JACOBS 2	92		14,2	12,39	22,23		60
C1J3		JACOBS 3	102		20,6	18,95	30,96		60
C1J6		JACOBS 6	96		17,17	15,85	25,4		60
C1J33		JACOBS 33	96		15,85	14,24	25,4		60
C1F38		Thr. 3/8” x 24	83		–	–	14,3		60
C1F12		Thr. 1/2” x 20	85		–	–	14,3		60
C2B10	2	DIN B10	105	80	10,094	9,4	14,5	Individual box	130
C2B12		DIN B12	106		12,065	11,1	18,5		135
C2B16		DIN B16	112		15,733	14,5	24		160
C2B18		DIN B18	119		17,78	16,2	32		180
C2B22		DIN B22	130		21,793	19,8	40,5		245
C2J0		JACOBS 0	96		6,35	5,802	11,112		125
C2J1		JACOBS 1	101		9,754	8,468	16,67		130
C2J2		JACOBS 2	107		14,2	12,39	22,23		160
C2J3		JACOBS 3	117		20,6	18,95	30,96		200
C2J4		JACOBS 4	129		28,55	26,346	42,07		210
C2J6		JACOBS 6	111		17,17	15,85	25,4		165
C2J33		JACOBS 33	112		15,85	14,24	25,4		160
C2F38		Thr. 3/8” x 24	96		–	–	14,3		160
C2F12		Thr. 1/2” x 20	104		–	–	14,3		165
C2F58		Thr. 5/8” x 16	117		–	–	17,5		180
C2F34		Thr. 3/4” x 16	107		–	–	17,5		190
C3B12	3	DIN B12	125	99	12,065	11,1	18,5	Individual box	280
C3B16		DIN B16	134		15,733	14,5	24		310
C3B18		DIN B18	140		17,78	16,2	32		320
C3B22		DIN B22	147		21,793	19,8	40,5		390
C3B24		DIN B24	157		23,825	21,3	50,5		440
C3J1		JACOBS 1	125		9,754	8,468	16,67		290
C3J2		JACOBS 2	126		14,2	12,39	22,23		310
C3J3		JACOBS 3	136		20,6	18,95	30,96		350
C3J6		JACOBS 6	130		17,17	15,85	25,4		310
C3J33		JACOBS 33	130		15,85	14,24	25,4		310
C3J4		JACOBS 4	147		28,55	26,346	42,07		330
C3F38		Thr. 3/8” x 24	114		–	–	14,3		310
C3F12		Thr. 1/2” x 20	122		–	–	14,3		320
C3F58		Thr. 5/8” x 16	126		–	–	17,5		340
C3F34		Thr. 3/4” x 16	126		–	–	17,5		350
C4B16	4	DIN B16	156	124	15,733	14,5	24	Individual box	625
C4B18		DIN B18	164		17,78	16,2	32		660
C4B22		DIN B22	176		21,793	19,8	40,5		715
C4B24		DIN B24	186		23,825	21,3	50,5		770
C4J2		JACOBS 2	153		14,2	12,39	22,23		600
C4J3		JACOBS 3	162		20,6	18,95	30,96		660
C4J4		JACOBS 4	173		28,55	26,346	42,07		700
C4J5		JACOBS 5	179		35,89	33,422	47,625		750
C4J6		JACOBS 6	156		17,17	15,85	25,4		650
C4J33		JACOBS 33	156		15,85	14,24	25,4		640
C5B16	5	DIN B16	198	156	15,733	14,5	24	Individual box	1600
C5B18		DIN B18	198		17,78	16,2	32		1600
C5B22		DIN B22	207		21,793	19,8	40,5		1650
C5B24		DIN B24	217		23,825	21,3	50,5		1700
C5J3		JACOBS 3	198		20,6	18,95	30,96		1600
C5J4		JACOBS 4	210		28,55	26,346	42,07		1650
C5J5		JACOBS 5	216		35,89	33,422	47,625		1700
C5J6		JACOBS 6	198		17,17	15,85	25,4		1650

Iso taper arbors hardened and tempered according to DIN 2080

Model No.	Iso taper	Chuck mount	Drawbolt thread	Packaging style	Weight g
ISO30J6	30	JACOBS 6	M12	Individual box	425
ISO30B12		DIN B12			420
ISO30B16		DIN B16			425
ISO40J6	40	JACOBS 6	M16	Individual box	970
ISO40B12		DIN B12			965
ISO40B16		DIN B16			970
ISO40B18		DIN B18			970
ISO50J6	50	JACOBS 6	M24	Individual box	2560
ISO50B16		DIN B16			
ISO50B18		DIN B18			

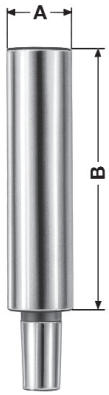

Parallel arbors with Jacobs taper mounts

Model No.	A	B mm	Jacobs taper mount	Packaging style	Weight g
PA12J0	1/2”	64	0	Individual box	86
PA12J1			1		93
PA12J2			2		115
PA12J6			6		129
PA12J33			33		122
PA58J1	5/8”	64	1	Individual box	127
PA58J2			2		145
PA58J3			3		160
PA58J6			6		160
PA58J33			33		155
PA34J1	3/4”	72	1	Individual box	200
PA34J2			2		218
PA34J3			3		275
PA34J6			6		235
PA34J33			33		225
PA1J2	1”	74	2	Individual box	349
PA1J3			3		355
PA1J6			6		365
PA1J33			33		365

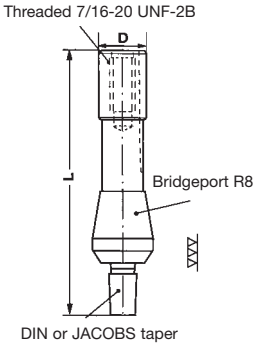

Bridgeport R8 taper adaptors for chucks with DIN or Jacobs mount

Model No.	Taper	Mount	D mm	L mm	Drawbolt thread	Packaging style	Weight g
CR8B16	Bridgeport R8	DIN B16	24.10	135	7/16”-20	Individual box	425
CR8J2	Bridgeport R8	JACOBS 2	24.10	132	7/16”-20	Individual box	400
CR8J3		JACOBS 3		141			460
CR8J6		JACOBS 6		135			430
CR8J33		JACOBS 33		135			420

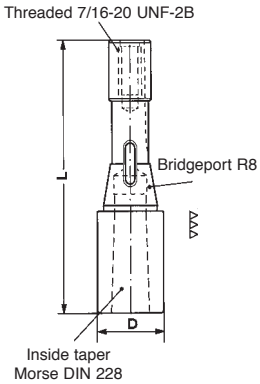

Bridgeport R8 taper adaptors for Morse taper

Model No.	Taper	Morse taper	D mm	L mm	Drawbolt thread	Packaging style	Weight g
CR8MT1	Bridgeport R8	**1**	32	124	7/16”-20	Individual box	450
CR8MT2		**2**		137			460
CR8MT3		**3**		139			320

Reducing sleeves according to DIN 2185, hardened and tempered, precision ground internally and externally

Model No.	Morse taper inside		outside	A mm	B mm	C mm	D mm	E mm	Packaging style	Weight g
B01	**0**	–	**1**	80	19	12.065	9.045	13.0	Inividual box	30
B12	**1**	–	**2**	92	17	17.780	12.065	18.6		95
B13	**1**	–	**3**	99	5	23.825	12.065	24.1		250
B23	**2**	–	**3**	112	18	23.825	17.780	24.7		190
B14	**1**	–	**4**	124	6.5	31.267	12.065	31.6		550
B24	**2**	–	**4**	124	6.5	31.267	17.780	31.6		480
B34	**3**	–	**4**	140	22.5	31.267	23.825	32.4		360
B15	**1**	–	**5**	156	6.5	44.399	12.065	44.7		1700
B25	**2**	–	**5**	156	6.5	44.399	17.780	44.7		1520
B35	**3**	–	**5**	156	6.5	44.399	23.825	44.7		1360
B45	**4**	–	**5**	171	21.5	44.399	31.267	45.5		1020
B36	**3**	–	**6**	218	8	63.348	23.825	63.8		5300
B46	**4**	–	**6**	218	8	63.348	31.267	63.8		5010
B56	**5**	–	**6**	218	8	63.348	44.399	63.8		4200

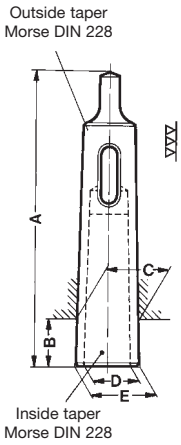

Oil toughened reducing sleeves
externally precision ground with hardened tang

Model No.	Morse taper inside		outside	A mm	B mm	C mm	D mm	E mm	Packaging style	Weight g
B01OT	**0**	–	**1**	80	19	12.065	9.045	13.0	Individual box	30
B12OT	**1**	–	**2**	92	17	17.780	12.065	18.6		95
B13OT	**1**	–	**3**	99	5	23.825	12.065	24.1		250
B23OT	**2**	–	**3**	112	18	23.825	17.780	24.7		190
B14OT	**1**	–	**4**	124	6.5	31.267	12.065	31.6		550
B24OT	**2**	–	**4**	124	6.5	31.267	17.780	31.6		480
B34OT	**3**	–	**4**	140	22.5	31.267	23.825	32.4		360
B15OT	**1**	–	**5**	156	6.5	44.399	12.065	44.7		1700
B25OT	**2**	–	**5**	156	6.5	44.399	17.780	44.7		1520
B35OT	**3**	–	**5**	156	6.5	44.399	23.825	44.7		1360
B45OT	**4**	–	**5**	171	21.5	44.399	31.267	45.5		1020
B36OT	**3**	–	**6**	218	8	63.348	23.825	63.8		5300
B46OT	**4**	–	**6**	218	8	63.348	31.267	63.8		5010
B56OT	**5**	–	**6**	218	8	63.348	44.399	63.8		4200

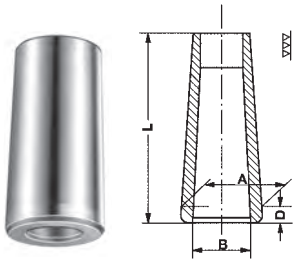

Reducing sleeves with plain through hole, hardened and tempered, precision ground internally and externally

Model No.	Morse taper inside		outside	L mm	D mm	A mm	B mm	Packaging style	Weight g
B12TH	**1**	–	**2**	50	4	17.780	12.065	Individual box	50
B13TH	**1**	–	**3**	55	4.5	23.825	12.065		140
B23TH	**2**	–	**3**	60	4.5	23.825	17.780		90
B14TH	**1**	–	**4**	65	5.3	31.267	12.065		320
B24TH	**2**	–	**4**	70	5.3	31.267	17.780		260
B34TH	**3**	–	**4**	75	5.3	31.267	23.825		170
B25TH	**2**	–	**5**	80	6.3	44.400	17.780		770
B35TH	**3**	–	**5**	90	6.3	44.400	23.825		740
B45TH	**4**	–	**5**	95	6.3	44.400	31.267		560
B36TH	**3**	–	**6**	110	7.9	63.380	23.825		2200
B46TH	**4**	–	**6**	120	7.9	63.380	31.267		2100
B56TH	**5**	–	**6**	125	7.9	63.380	44.400		1510

Morse taper turret sockets, hardened case, ground internally and externally

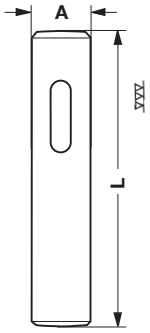

Inside taper
Morse DIN 228

Model No.	Diameter A	Morse taper	L mm	Packaging style	Weight g
TS75MT1	**3/4”**	1	89	Individual box	280
TS1MT1	**1”**	1	89	Individual box	300
TS1MT2		2	102		
TS15MT1	**1.1/2”**	1	89	Individual box	600
TS15MT2		2	102		770
TS15MT3		3	121		820
TS15MT4		4	153		1150
TS2MT3	**2”**	3	121	Individual box	1500
TS2MT4		4	153		1800
TS2125MT3	**2.1/8”**	3	121	Individual box	1750
TS2125MT4		4	153		2100
TS2125MT5		5	228		2500
TS25MT3	**2.1/2”**	3	121	Individual box	2500
TS25MT4		4	153		2900
TS25MT5		5	228		4500
TSM20MT1	**20 mm**	1	89	Individual box	280
TSM25MT1	**25 mm**	1	89	Individual box	300
TSM25MT2		2	102		
TSM30MT3	**30 mm**	3	121	Individual box	750
TSM40MT2	**40 mm**	2	102	Individual box	770
TSM40MT3		3	121		820
TSM40MT4		4	153		1150
TSM50MT3	**50 mm**	3	121	Individual box	1750
TSM50MT4		4	153		2100

Iso taper to Morse taper adaptors according to DIN 2080 hardened and tempered, precision ground internally and externally

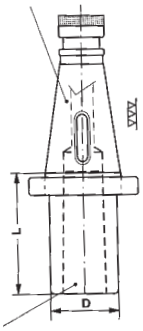

Inside taper
Morse DIN 228

Model No.	Iso taper outside	Morse taper inside	D mm	L mm	Drawbolt thread	Packaging style	Weight g
ISO30MT2	**30**	**2**	34	50	M12	Individual box	400
ISO30MT3		**3**	40	70			600
ISO40MT2	**40**	**2**	34	50	M16	Individual box	900
ISO40MT3		**3**	40	65			1000
ISO40MT4		**4**	50	95			1300
ISO50MT3	**50**	**3**	40	65	M24	Individual box	2800
ISO50MT4		**4**	50	70			2800
ISO50MT5		**5**	65	105			3200

Extension sockets according to DIN 2187, hardened and tempered, precision ground internally and externally

Model No.	Morse taper		a1	a2	d1	d2	d3	l1	l2	Packaging style	Weight g
	outside	inside	mm	mm	mm	mm	mm	mm	mm		
BL11145	1	1	–	7	12,065	12,065	20	145	83	Individual box	190
BL12160		2				17,78	30	160	98		250
BL21160	2	1	–	9	17,78	12,065	20	160	85	Individual box	340
BL22175		2				17,78	30	175	100		400
BL23196		3				23,825	36	196	121		550
BL31175	3	1	5	–	23,825	12,065	20	175	81	Individual box	400
BL32194		2	–	9		17,78	30	194	100		840
BL33215		3	–	9		23,825	36	215	121		1000
BL34240		4	–	9		31,267	48	240	146		1300
BL41200	4	1	6,5	–		12,065	20	200	82,5	Individual box	800
BL42215		2	6,5	–		17,78	30	215	97,5		850
BL43240		3	–	10,5		23,825	36	240	122,5		1500
BL44265		4	–	10,5	31,267	31,267	48	265	147,5		1900
BL45300		5	–	10,5		44,399	63	300	182,5		2750
BL51232	5	1	6,5	–	44,399	12,065	20	232	82,5	Individual box	1600
BL52247		2	6,5	–		17,78	30	247	97,5		1600
BL53268		3	6,5	–		23,825	36	268	118,5		2840
BL54300		4	–	13,5		31,267	48	300	150,5		3310
BL55335		5	–	13,5		44,399	63	335	185,5		4200

Oil toughened extension sockets externally precision ground with hardened tang

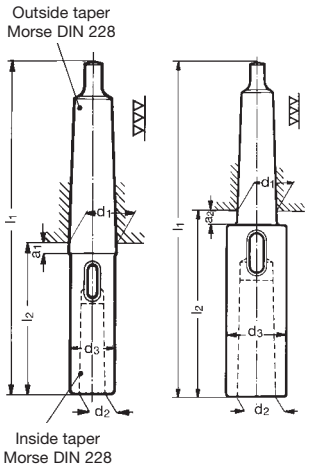

Model No.	Morse taper		a1	a2	d1	d2	d3	l1	l2	Packaging style	Weight g
	outside	inside	mm	mm	mm	mm	mm	mm	mm		
BL11145OT	1	1	–	7	12,065	12,065	20	145	83	Individual box	190
BL12160OT		2				17,78	30	160	98		250
BL21160OT	2	1	–	9	17,78	12,065	20	160	85	Individual box	340
BL22175OT		2				17,78	30	175	100		400
BL23196OT		3				23,825	36	196	121		550
BL31175OT	3	1	5	–	23,825	12,065	20	175	81	Individual box	400
BL32194OT		2	–	9		17,78	30	194	100		840
BL33215OT		3	–	9		23,825	36	215	121		1000
BL34240OT		4	–	9		31,267	48	240	146		1300
BL41200OT	4	1	6,5	–	31,267	12,065	20	200	82,5	Individual box	800
BL42215OT		2	6,5	–		17,78	30	215	97,5		850
BL43240OT		3	–	10,5		23,825	36	240	122,5		1500
BL44265OT		4	–	10,5		31,267	48	265	147,5		1900
BL45300OT		5	–	10,5		44,399	63	300	182,5		2750
BL51232OT	5	1	6,5	–	44,399	12,065	20	232	82,5	Individual box	1600
BL52247OT		2	6,5	–		17,78	30	247	97,5		1600
BL53268OT		3	6,5	–		23,825	36	268	118,5		2840
BL54300OT		4	–	13,5		31,267	48	300	150,5		3310
BL55335OT		5	–	13,5		44,399	63	335	185,5		4200

Oil toughened long pattern extension sockets
externally precision ground with hardened tang

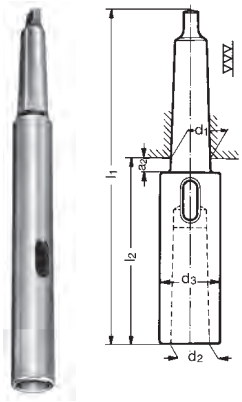

Model No.	Morse taper outside		inside	a_1 mm	a_2 mm	d_1 mm	d_2 mm	d_3 mm	l_1 mm	l_2 mm	Packaging style	Weight g
BL11200OT	1	–	1	–	7	12.065	12.065	20	200	138	Individual box	250
BL11250OT									250	188		375
BL11300OT									300	238		500
BL11350OT									350	288		625
BL11400OT									400	338		750
BL11450OT									450	388		875
BL11500OT									500	438		1000
BL22200OT	2	–	2	–	9	17.780	17.780	25	200	125	Individual box	430
BL22250OT									250	175		625
BL22300OT									300	225		820
BL22350OT									350	275		1015
BL22400OT									400	325		1200
BL22450OT									450	375		1400
BL22500OT									500	425		1600
BL22600OT									600	525		1800
BL33250OT	3	–	3	–	9	23.825	23.825	32	250	156	Individual box	1000
BL33300OT									300	206		1300
BL33350OT									350	256		1550
BL33400OT									400	306		1850
BL33450OT									450	356		2100
BL33500OT									500	406		2400
BL33600OT									600	506		2700
BL44300OT	4	–	4	–	10.5	31.267	31.267	40	300	182.5	Individual box	1650
BL44350OT									350	232.5		2150
BL44400OT									400	282.5		2650
BL44450OT									450	332.5		3100
BL44500OT									500	382.5		3600
BL44600OT									600	482.5		4200

Lathe (dead) centres precision ground, hardened and tempered according to DIN 806

Carbon steel full point 60°

Model No.	Morse taper	A mm	B mm	Packaging style	Weight g
CFN1	**1**	12.2	80	Individual box	60
CFN2	**2**	18	100		150
CFN3	**3**	24.1	125		340
CFN4	**4**	31.6	160		790
CFN5	**5**	44.7	200		1920
CFN6	**6**	63.8	270		5200

Carbon steel half point 60°

Model No.	Morse taper	A mm	B mm	E mm	F mm	Packaging style	Weight g
CFR1	**1**	12.2	80	7.6	22	Individual box	55
CFR2	**2**	18	100	11	30		145
CFR3	**3**	24.1	125	15	38		310
CFR4	**4**	31.6	160	21	50		740
CFR5	**5**	44.7	200	29.4	63		1800
CFR6	**6**	63.8	270	42	79		4800

Carbide tipped full point 60°

Model No.	Morse taper	A mm	B mm	D mm	Packaging style	Weight g
CFW1	**1**	12.2	80	7	Individual box	60
CFW2	**2**	18	100	7		150
CFW3	**3**	24.1	125	11		340
CFW4	**4**	31.6	160	14		790
CFW5	**5**	44.7	200	18		1920
CFW6	**6**	63.8	270	18		5200

Carbide tipped half point 60°

Model No.	Morse taper	A mm	B mm	D mm	E mm	F mm	Packaging style	Weight g
CFWR1	**1**	12.2	80	7	7.6	22	Individual box	55
CFWR2	**2**	18	100	7	11	30		145
CFWR3	**3**	24.1	125	11	15	38		310
CFWR4	**4**	31.6	160	14	21	50		740
CFWR5	**5**	44.7	200	18	29.4	63		1800
CFWR6	**6**	63.8	270	18	42	79		4800

Lathe centres with draw off nut according to DIN 807

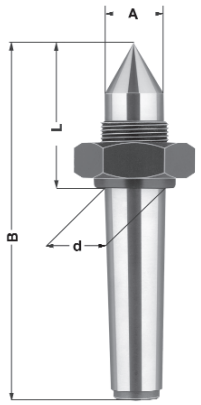

Standard point completely hardened and ground

Model No.	Morse taper	A thread	B mm	d mm	L mm	Packaging style	Weight g
CDN1	**1**	M16x1.5	90	12.065	36.5	Individual box	140
CDN2	**2**	M22x1.5	112	17.780	48		300
CDN3	**3**	M27x1.5	138	23.825	57		580
CDN4	**4**	M36x1.5	175	31.267	72.5		800
CDN5	**5**	M48x1.5	217	44.399	87.5		2900
CDN6	**6**	M68x1.5	290	63.348	108		7200

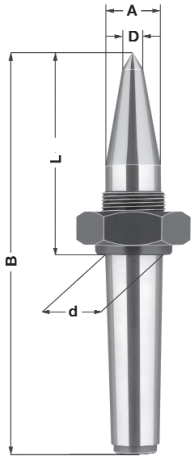

Extended point completely hardened and ground

Model No.	Morse taper	A thread	B mm	D mm	d mm	L mm	Packaging style	Weight g
CCDN1	**1**	M16x1.5	93	5	12.065	36.5	Individual box	170
CCDN2	**2**	M22x1.5	118	10	17.780	54		300
CCDN3	**3**	M27x1.5	148	10	23.825	67		600
CCDN4	**4**	M36x1.5	186.5	14	31.267	84		1285
CCDN5	**5**	M48x1.5	242	16	44.399	112		3000
CCDN6	**6**	M68x1.5	330	20	63.348	148		7900

Spare draw off nuts

Model No.	Morse taper	Thread
DNM16	**1**	M16x1.5
DNM22	**2**	M22x1.5
DNM27	**3**	M27x1.5
DNM36	**4**	M36x1.5
DNM48	**5**	M48x1.5
DNM68	**6**	M68x1.5

General purpose

Model No.	Morse taper	D mm	d mm	d_1 mm	L mm	A mm	B mm	C mm	Max workpiece weight kg	Max speed r.p.m.	Max runout mm	Packaging style	Weight g
M1	**1**	28	10	12.06	51	16	30	105	80	3800	0.008	Individual box	200
M2	**2**	41	18	17.78	75	25	40	139	180	3800			550
M3	**3**	50	23	23.82	90	34	48	172	270	3500			970
M4	**4**	60	25	31.26	99	35	52	202	550	3500			1550
M5	**5**	75	38	44.39	130	52	65	259	1000	3000	0.012		3200
M6	**6**	96	50	63.34	156	65	82	338	1500	2600	0.015		7500

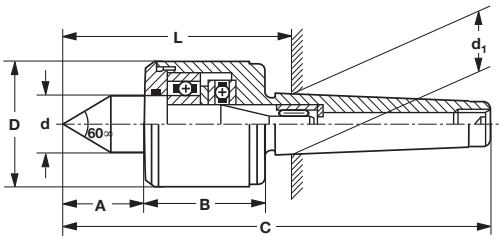

Reduced body diameter

Model No.	Morse taper	D mm	d mm	d_1 mm	L mm	A mm	B mm	C mm	Max workpiece weight kg	Max speed r.p.m.	Max runout mm	Packaging style	Weight g
MR2	**2**	32	15	17.78	62	20	37	128	200	6000	0.005	Individual box	300
MR3	**3**	34	15	23.82	63	20	38	141	400	6000	0.005		500
MR4	**4**	42	20	31.26	76	26	42	180	800	6000	0.005		1000
MR5	**5**	58	30	44.39	105	35	62	238	1200	4000	0.008		2500

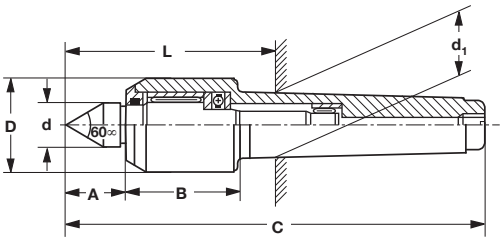

Woodworking

Model No.	Morse taper	D mm	d mm	d_1 mm	L mm	A mm	B mm	C mm	Max workpiece weight kg	Max speed r.p.m.	Max runout mm	Packaging style	Weight g
MW1	**1**	32	15	12.06	53.5	20	26.8	108	2.5	6200	0.03	Individual box	215
MW2	**2**	32	15	17.78	56.8	20	28.1	119	4	6200	0.03		280

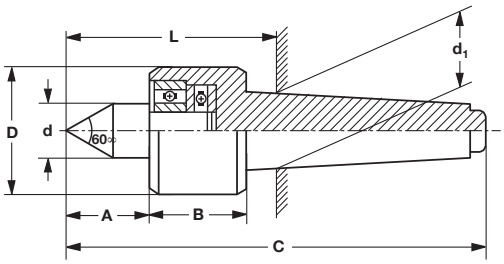

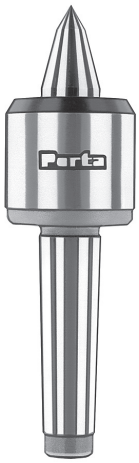

Extended point for copy turning machines

Model No.	Morse taper	D mm	d mm	d_1 mm	L mm	A mm	B mm	C mm	E mm	Max workpiece weight kg	Max speed r.p.m.	Max runout mm	Packaging style	Weight g
MC3	**3**	50	23	23.82	90	35	48	171	11	270	4200	0.008	Individual box	970
MC4	**4**	60	25	31.26	101	39	52	205	14	550	3800			1550
MC5	**5**	75	38	44.39	131	53	65	260	20	1000	3000	0.012		3200

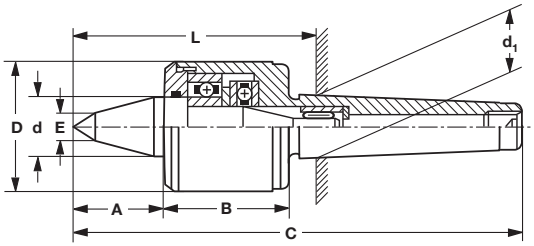

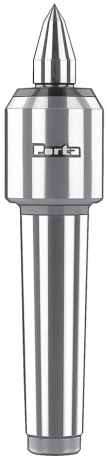

Reduced body diameter extended point for copy turning machines

Model No.	Morse taper	D mm	d mm	d_1 mm	L mm	A mm	B mm	C mm	E mm	Max workpiece weight kg	Max speed r.p.m.	Max runout mm	Packaging style	Weight g
MRC2	**2**	32	15	17.78	71	29	37	137	8	150	6000	0.005	Individual box	300
MRC3	**3**	34	15	23.82	73	30	38	151	8	300	6000			500
MRC4	**4**	42	20	31.26	86	36	42	190	10	700	6000			1000
MRC5	**5**	58	30	44.39	116	46	62	249	12	1000	4000	0.01		2500

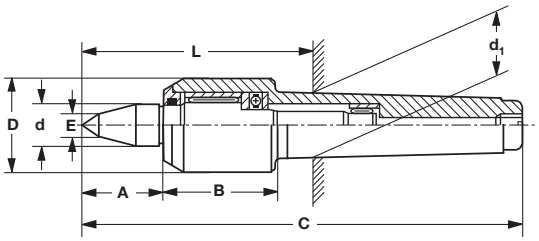

Chuck taper mount dimensions according to **DIN 238** and **Jacobs** norms

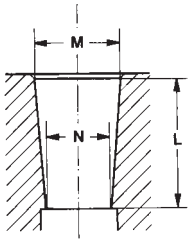

Norm	Chuck taper mount	M mm	N mm	L mm
DIN 238	B6	6.35	5.85	10.0
	B10	10.094	9.4	14.5
	B12	12.065	11.1	18.5
	B16	15.733	14.5	24.0
	B18	17.780	16.2	32.0
	B22	21.793	19.8	40.5
	B24	23.825	21.3	50.5
JACOBS	J0	6.350	5.803	11.11
	J1	9.754	8.468	16.67
	J2	14.2	12.39	22.23
	J2 short	13.94	12.39	19.05
	J33	15.85	14.24	25.4
	J6	17.17	15.85	25.4
	J3	20.6	18.95	30.96
	J4	28.55	26.35	42.07

Chuck threaded mount dimensions

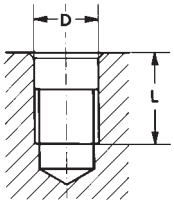

Threaded mount	Class	D mm	Pitch mm	L mm
3/8" x 24 UNF	3B	9.525	1.058	14.5
1/2" x 20 UNF	3B	12.700	1.270	16.0
5/8" x 16 UN	3B	15.875	1.588	19.0
3/4" x 16 UNF	3B	19.050	1.588	19.0
M14 x 2	MA	14.00	2.00	19.0
M18 x 2.5	MA	18.00	2.50	19.0

Morse taper dimensions according to **DIN 228**

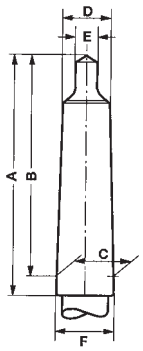

Morse taper	A mm	B mm	C mm	D mm	E mm	F mm	Taper %
0	59.5	56.5	9.045	6.1	3.9	9.2	5.205
1	65.5	62.0	12.065	9.0	5.2	12.2	4.988
2	80.0	75.0	17.780	14.0	6.3	18.0	4.995
3	99.0	94.0	23.825	19.1	7.9	24.1	5.020
4	124.0	117.5	31.267	25.2	11.9	31.6	5.194
5	156.0	149.5	44.399	36.5	15.9	44.7	5.263
6	218.0	210.0	63.348	52.4	19.0	63.8	5.214

Iso taper dimensions according to **DIN 2080**

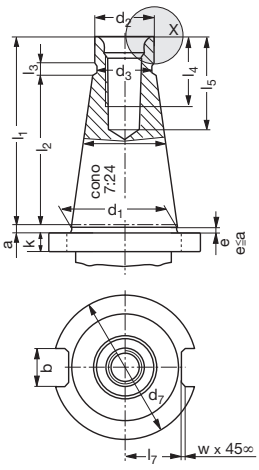

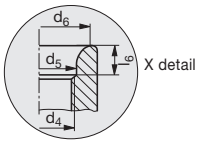

Iso taper	a mm	b mm	d_1 mm	d_2 mm	d_3 mm	d_4	d_5 mm	d_6 mm	d_7 mm	k mm	l_1 mm	l_2 mm	l_3 mm	l_4 mm	l_5 mm	l_6 mm	l_7 mm	w mm
30	1.6	16.1	31.75	17.11	16.5	M12	13	16	50	8	68.4	48.4	3	24	33.5	5.5	16.2	1.6
40	1.6	16.1	44.45	25	24	M16	17	21.5	63	10	93.4	65.4	5	32	42.5	8.2	22.5	1.6
50	3.2	25.7	69.85	39.30	38	M24	26	32	97.5	12	126.8	101.8	8	47	61.5	11.5	35.3	2

Note

Packaging style

CATALOGUE 021/22

Porta

DRILL CHUCKS & POWER TOOL ACCESSORIES

SINCE 1936

PORTA Srl

Via Sommariva 33/12
10022 Carmagnola
Torino
Italy

T: +39 011 9710018
F: +39 011 9712547
E: porta@portachucks.com
www.portachucks.com

PORTA (UK) Ltd

Dukeries Way
Dukeries Industrial Estate
Worksop, Notts S81 7DW
England
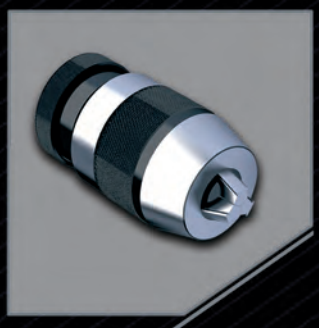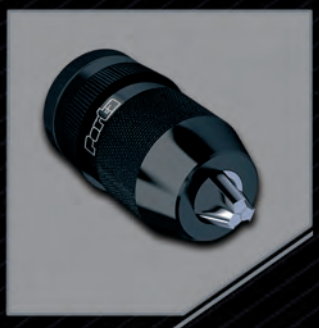
T: +44 1909 530135
F: +44 1909 501589
E: sales@portauk.co.uk
www.portaplus.co.uk